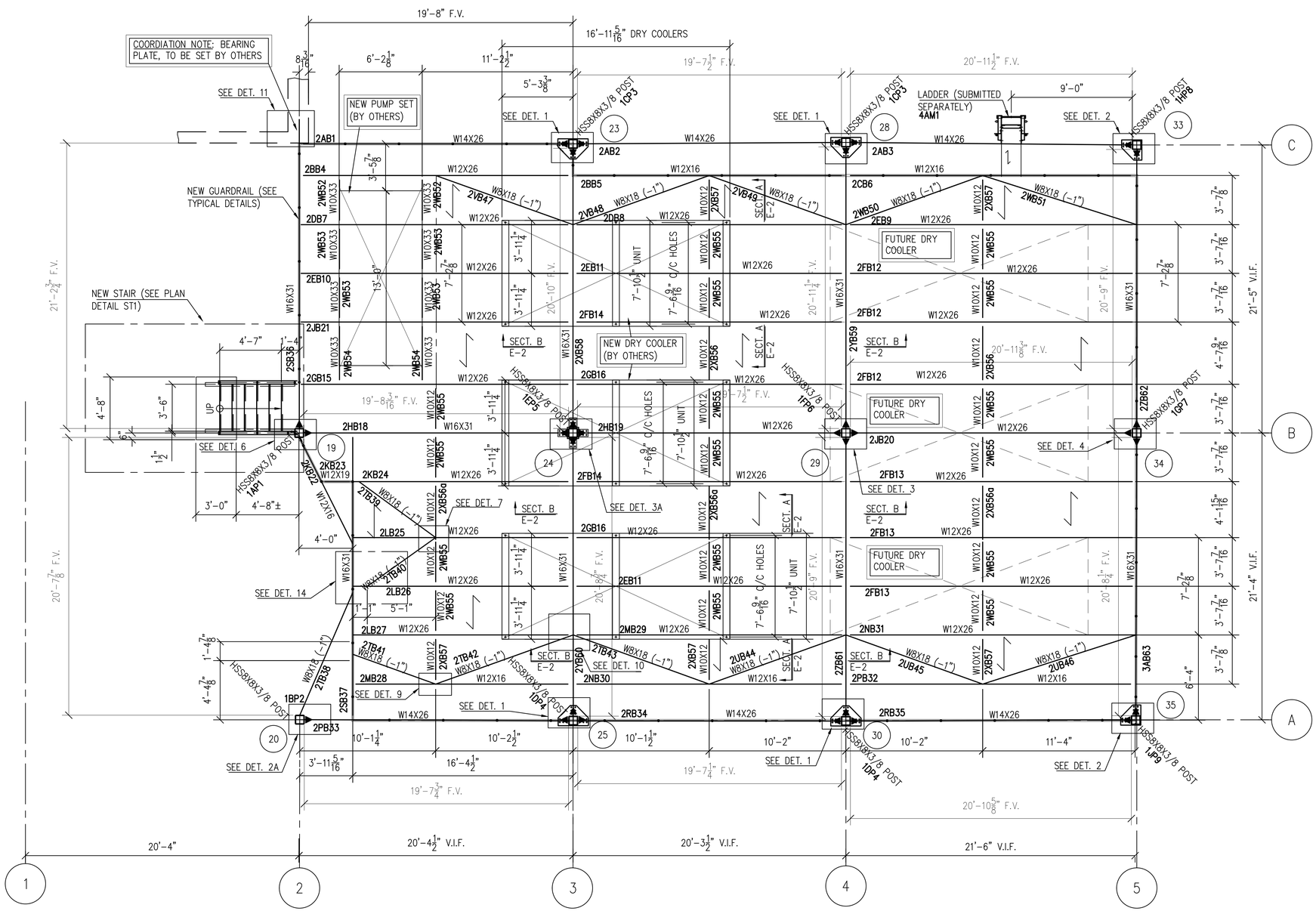

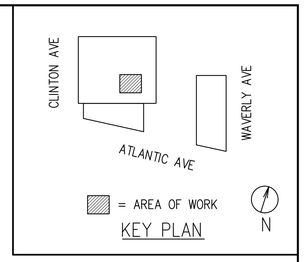

NOTES:
- ⟵⟶ INDICATES DIRECTION OF NEW 1"x3/16" GALV. 19-W-4 WB GRATING (BY McNICHOLS OR EQUAL)
- TOP OF GRATING AT +1'-11" ABOVE EXISTING PARAPET
- TOP OF STEEL AT +1'-10" ABOVE EXISTING PARAPET U.O.N.

ROOF DUNNAGE FRAMING PLAN

SCALE 1/4"=1'-0"

FOR FAB. & ERECTION:
4/30/2020

NOTE:
STEEL TO BE AS FOLLOWS
1. WIDE FLANGE TO BE ASTM A992
2. CHANNELS, PLATES AND ANGLES TO BE ASTM A36
3. HSS TO BE ASTM A500 GRADE B

PLAN NORTH

THE FOLLOWING NOTES ARE AN INTEGRAL OF THIS DRAWING AND OUR CONTRACT:

1) THE G.C. IS TO RETURN ONE MARKED-UP COPY TO OUR OFFICE. We require review by both the architect and engineer.
2) If Architect/Engineer marks up drawing "REVISE/D" we will construe this action to mean we are in compliance with contract documents and, in fact, these drawings are "APPROVED" or "APPROVED AS NOTED" unless specifically stated otherwise.
3) These drawings are our interpretation of what is necessary to meet your specifications. It is most important, therefore, that they are checked by the G.C./Architect/Engineer against drawings provided by other trades to ensure proper installation to those surrounding materials.
4) This drawing is for the exclusive use of Hidlen Steel.
5) Work areas must be free of all obstructions prior to steel installation date. This includes ducts, pipes, electrical work, and all other obstructions which prevent direct vertical lift of steel to its final location.
6) Should roof or slab penetrations be required, the G.C. is responsible for all roof or slab proection, penetrations and subsequent fire stopping, waterproofing, flashing, etc.
7) Location of holes, clips, cuts for other trades, if required by our contract, MUST be shown and or verified by others on this drawing when submitted for approval.
8) Do not scale this drawing.
9) New steel is shown as [————————], existing steel is shown as [—— —— ——]

STEEL	PAINT	HOLES	BOLTS	ELECTRODES
SEE NOTE	HOT-DIP GALVANIZED	13/16"ø	3/4"ø A325 (U.N.O.)	E7018 (U.N.O.)

NO.	DATE	COMMENTS	NO.	DATE	ISSUED FOR
6	4/30/2020	STAIR – RELEASE FOR FABRICATION	1	4/30/2020	FOR FAB. & ERECTION
5	4/1/2020	PARTIAL RELEASE FOR FABRICATION	1	4/1/2020	FOR FAB. & ERECTION
4	3/30/2020	PARTIAL RELEASE FOR FABRICATION	1	3/31/2020	FOR FAB. & ERECTION
3	3/26/2020	PARTIAL RELEASE FOR FABRICATION	1	3/26/2020	FOR FAB. & ERECTION
2	3/24/2020	PARTIAL RELEASE FOR FABRICATION	1	3/24/2020	FOR FAB. & ERECTION
1	2/7/2020	REVISED PER DESIGN CHANGE	1	2/8/2020	APPROVAL
		FIRST ISSUE	1	11/6/2019	APPROVAL

REVISIONS — PRINT RECORD

DWG TITLE
ROOF DUNNAGE
FRAMING, STAIR, & GUARDRAILS

PROJECT NAME

ARCH'T –			DWG REF
ENG'R			DWG REF S-101.00 S-102.00
CONT'R		SUPER	
DRN BY TS/OC	CHK'D BY	JOB NO. 4550	SEARCH –	DWG NO. E1
DATE 11/4/19	DATE			

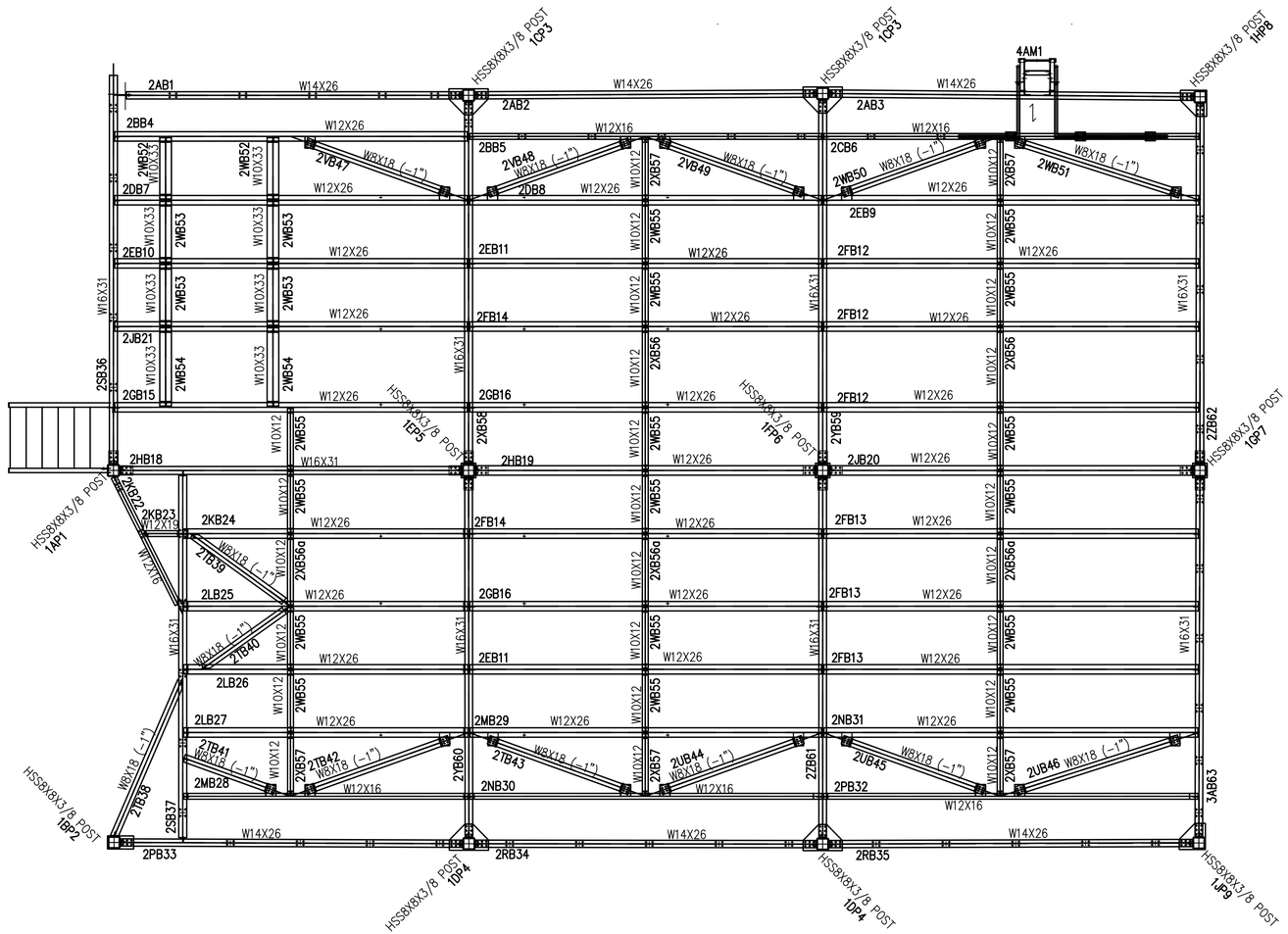

ROOF DUNNAGE FRAMING PLAN
STRUCTURAL FRAMING & PIECEMARKS

PROVIDED FOR CLARITY AS ERECTION AID
REFER TO E1 FRAMING PLAN FOR ALL DIMENSIONS & RELEVANT INFO
SCALE 1/4"=1'-0"

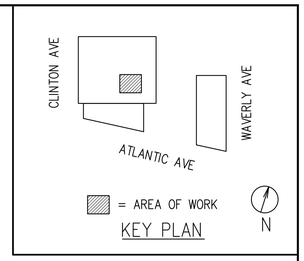

KEY PLAN

PLAN NORTH

THE FOLLOWING NOTES ARE AN INTEGRAL OF THIS DRAWING AND OUR CONTRACT:

1) THE G.C. IS TO RETURN ONE MARKED-UP COPY TO OUR OFFICE. We require review by both the architect and engineer.
2) If Architect/Engineer marks up drawing "REVISED" we will construe this action to mean we are in compliance with contract documents and, in fact, these drawings are "APPROVED" or "APPROVED AS NOTED" unless specifically stated otherwise.
3) These drawings are our interpretation of what is necessary to meet your specifications. It is most important, therefore, that they are checked by the G.C./Architect/Engineer against drawings provided by other trades to ensure proper installation to those surrounding materials.
4) This drawing is for the exclusive use of Hidlen Steel.
5) Work areas must be free of all obstructions prior to steel installation date. This includes ducts, pipes, electrical work, and all other obstructions which prevent direct vertical lift of steel to its final location.
6) Should roof or slab penetrations be required, the G.C. is responsible for all roof or slab proction, penetrations and subsequent fire stopping, waterproofing, flashing, etc.
7) Location of holes, clips, cuts for other trades, if required by our contract, MUST be shown and or verified by others on this drawing when submitted for approval.
8) Do not scale this drawing.
9) New steel is shown as [———————], existing steel is shown as [—— —— ——]

STEEL	PAINT	HOLES	BOLTS	ELECTRODES
SEE NOTE	HOT-DIP GALVANIZED	13/16"ø	3/4"ø A325 (U.N.O.)	E7018 (U.N.O.)

NO.	DATE	COMMENTS	NO.	DATE	ISSUED FOR
6	4/30/2020	STAIR – RELEASE FOR FABRICATION	1	4/30/2020	FOR FAB. & ERECTION
5	4/1/2020	PARTIAL RELEASE FOR FABRICATION	1	4/1/2020	FOR FAB. & ERECTION
4	3/31/2020	PARTIAL RELEASE FOR FABRICATION	1	3/31/2020	FOR FAB. & ERECTION
3	3/26/2020	PARTIAL RELEASE FOR FABRICATION	1	3/26/2020	FOR FAB. & ERECTION
2	3/24/2020	PARTIAL RELEASE FOR FABRICATION	1	3/24/2020	FOR FAB. & ERECTION
1	2/7/2020	REVISED PER DESIGN CHANGE	1	2/8/2020	APPROVAL
		FIRST ISSUE	1	11/8/2019	APPROVAL

REVISIONS — PRINT RECORD

FOR FAB. & ERECTION:
4/30/2020

DWG TITLE
ROOF DUNNAGE
FRAMING, STAIR, & GUARDRAILS

PROJECT NAME

NOTE:
STEEL TO BE AS FOLLOWS
1. WIDE FLANGE TO BE ASTM A992
2. CHANNELS, PLATES AND ANGLES TO BE ASTM A36
3. HSS TO BE ASTM A500 GRADE B

ARCH'T –				DWG REF
ENG'R				DWG REF S-101.00 S-102.00
CONT'R			SUPER	
DRN BY TS/OC	CHK'D BY	JOB NO. 4550	SEARCH –	DWG NO. E1A
DATE 11/4/19	DATE			

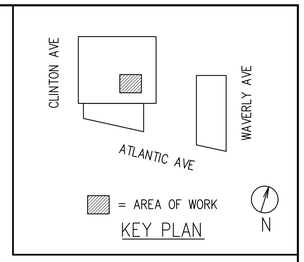

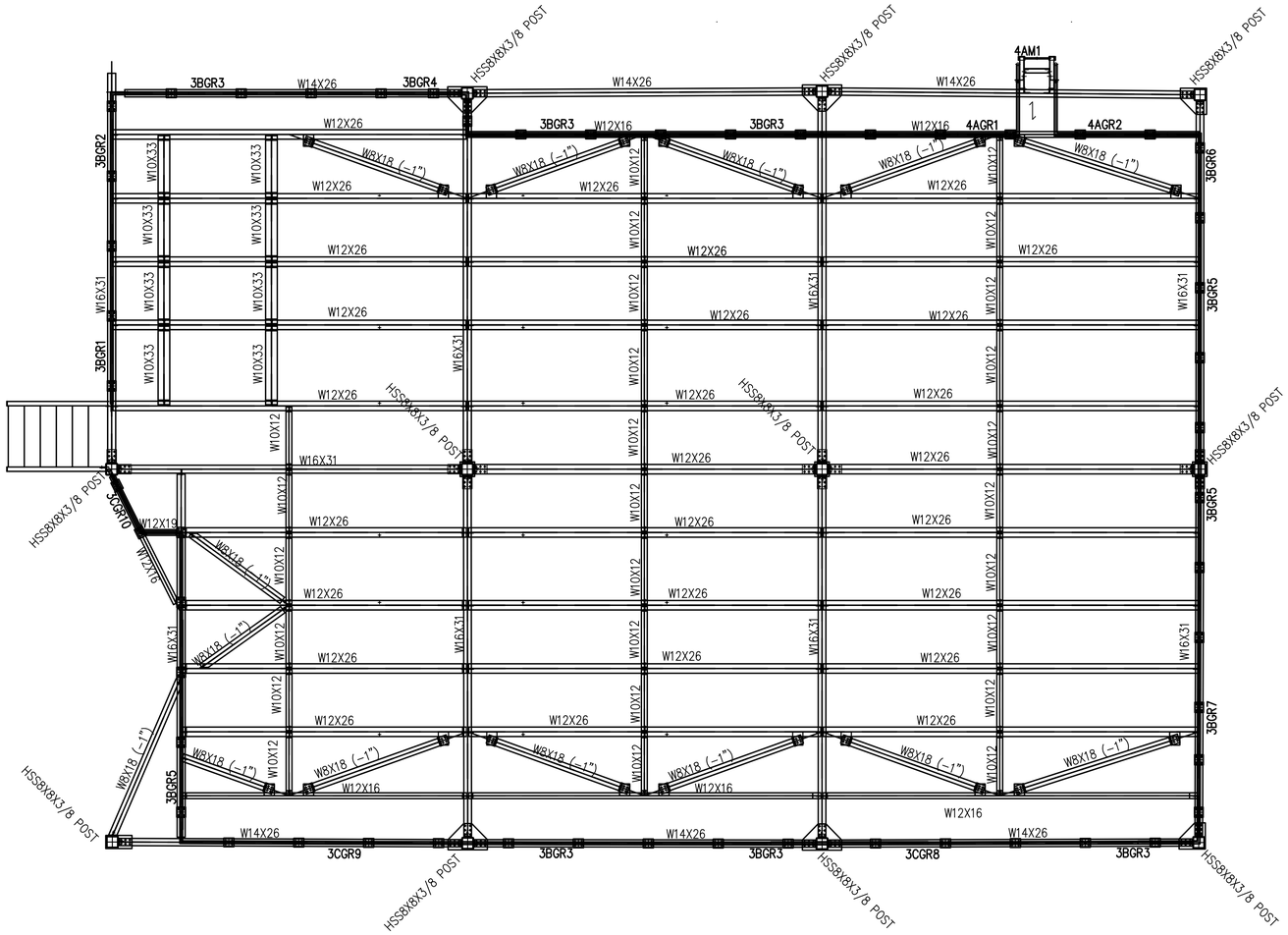

ROOF DUNNAGE FRAMING PLAN
GUARDRAIL PIECEMARKS

PROVIDED FOR CLARITY AS ERECTION AID
REFER TO E1 FRAMING PLAN FOR ALL DIMENSIONS & RELEVANT INFO
SCALE 1/4"=1'-0"

FOR FAB. & ERECTION:
4/30/2020

NOTE:
STEEL TO BE AS FOLLOWS
1. WIDE FLANGE TO BE ASTM A992
2. CHANNELS, PLATES AND ANGLES TO BE ASTM A36
3. HSS TO BE ASTM A500 GRADE B

PLAN NORTH

THE FOLLOWING NOTES ARE AN INTEGRAL OF THIS DRAWING AND OUR CONTRACT:

1) THE G.C. IS TO RETURN ONE MARKED-UP COPY TO OUR OFFICE. We require review by both the architect and engineer.
2) If Architect/Engineer marks up drawing "AS-NOTED" we will construe this action to mean we are in compliance with contract documents and, in fact, these drawings are "APPROVED" or "APPROVED AS NOTED" unless specifically stated otherwise.
3) These drawings are our interpretation of what is necessary to meet your specifications. It is most important, therefore, that they are checked by the G.C./Architect/Engineer against drawings provided by other trades to ensure proper installation to those surrounding materials.
4) This drawing is for the exclusive use of Hallen Steel.
5) Work areas must be free of all obstructions prior to steel installation date. This includes ducts, pipes, electrical work, and all other obstructions which prevent direct vertical lift of steel to its final location.
6) Should roof or slab penetrations be required, the G.C. is responsible for all roof or slab protection, penetrations and subsequent fire stopping, waterproofing, flashing, etc.
7) Location of holes, clips, cuts for other trades, if required by our contract, MUST be shown and or verified by others on this drawing when submitted for approval.
8) Do not scale this drawing.
9) New steel is shown as [————————], existing steel is shown as [—— —— ——]

STEEL	PAINT	HOLES	BOLTS	ELECTRODES
SEE NOTE	HOT-DIP GALVANIZED	13/16"ø	3/4"ø A325 (U.N.O.)	E7018 (U.N.O.)

NO.	DATE	COMMENTS	NO.	DATE	ISSUED FOR
6	4/30/2020	STAIR – RELEASE FOR FABRICATION	1	4/30/2020	FOR FAB. & ERECTION
5	4/1/2020	PARTIAL RELEASE FOR FABRICATION	1	4/1/2020	FOR FAB. & ERECTION
4	3/30/2020	PARTIAL RELEASE FOR FABRICATION	1	3/31/2020	FOR FAB. & ERECTION
3	3/26/2020	PARTIAL RELEASE FOR FABRICATION	1	3/26/2020	FOR FAB. & ERECTION
2	3/24/2020	PARTIAL RELEASE FOR FABRICATION	1	3/24/2020	FOR FAB. & ERECTION
1	2/7/2020	REVISED PER DESIGN CHANGE	1	2/8/2020	APPROVAL
		FIRST ISSUE	1	11/8/2019	APPROVAL

REVISIONS — PRINT RECORD

DWG TITLE
ROOF DUNNAGE
FRAMING, STAIR, & GUARDRAILS

PROJECT NAME

ARCH'T –				DWG REF
ENG'R				DWG REF S-101.00 S-102.00
CONT'R			SUPER	
DRN BY TS/OC	CHK'D BY	JOB NO. 4550	SEARCH –	DWG NO. E1B
DATE 11/4/19	DATE			

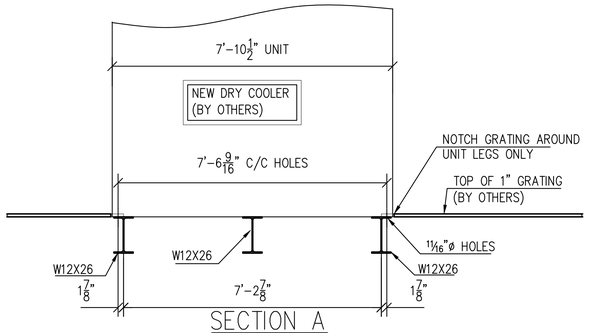

SECTION A
SCALE 1/2"=1'-0"

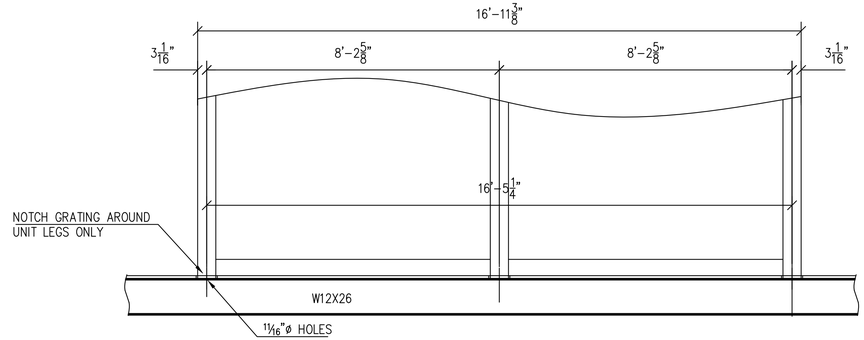

SECTION B
SCALE 1/2"=1'-0"

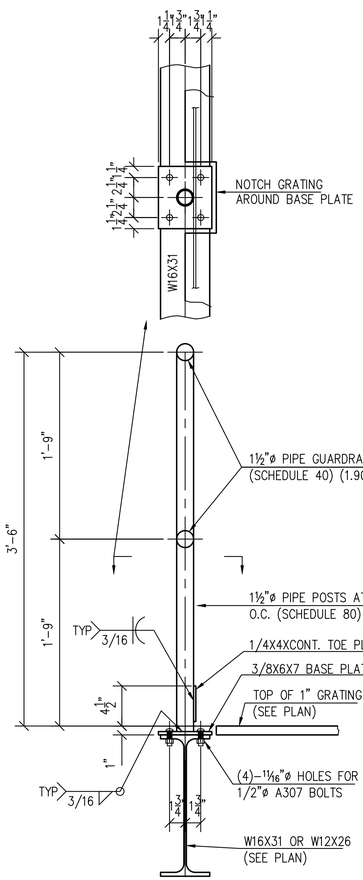

TYPICAL GUARDRAIL DETAIL AT W16X31 OR W12X26
SCALE 1 1/2"=1'-0"

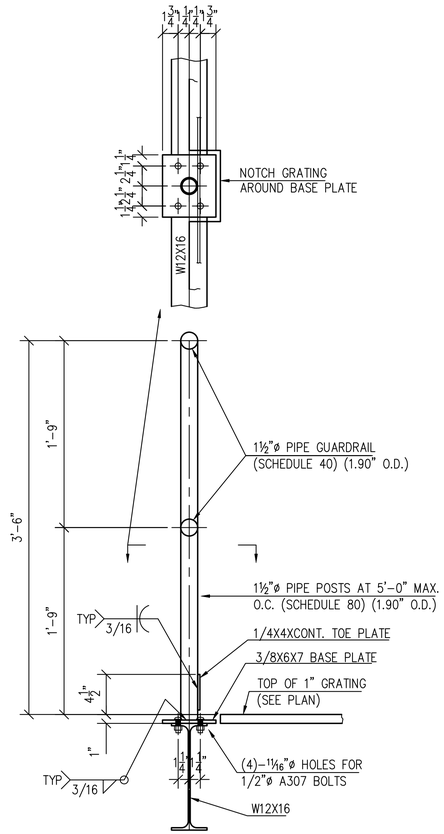

TYPICAL GUARDRAIL DETAIL AT W12X16
SCALE 1 1/2"=1'-0"

EXISTING CAP PLATE DIMENSIONS						
COL. #:	DIM. A:	DIM B:	DIM. C:	DIM. D:	DIM. E:	DIM. F:
18	4 3/4"	4 3/4"	5 3/4"	5 3/4"	V.I.F.	
23	4 3/4"	4 3/4"	5 3/4"	5 3/4"	1"ø	
28	4 3/4"	4 3/4"	5 3/4"	5 3/4"	1"ø	
33	4 3/4"	4 3/4"	4 3/4"	4 3/4"	1"ø	
19	4 3/4"	4 3/4"	5 3/4"	5 3/4"	1"ø	
24	4 3/4"	4 3/4"	5 3/4"	5 3/4"	1"ø	
29	4 3/4"	4 3/4"	5 3/4"	5 3/4"	1"ø	
34	4 3/4"	4 3/4"	4 3/4"	4 3/4"	1"ø	
20	4 3/4"	4 3/4"	5 3/4"	5 3/4"	1"ø	
25	4 3/4"	4 3/4"	5 3/4"	5 3/4"	1"ø	
30	4 3/4"	4 3/4"	5 3/4"	5 3/4"	1"ø	
35	4 3/4"	4 3/4"	4 3/4"	4 3/4"	1"ø	

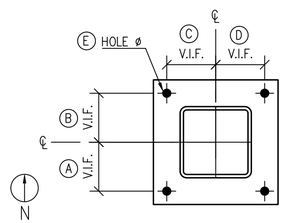

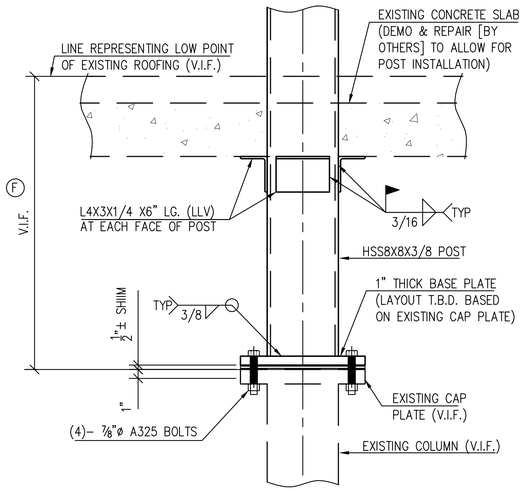

TYPICAL BASE PLATE DETAIL
SCALE 1 1/2"=1'-0"

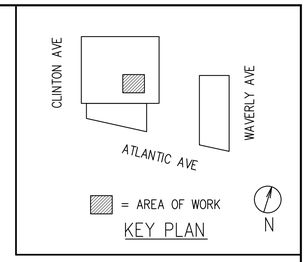

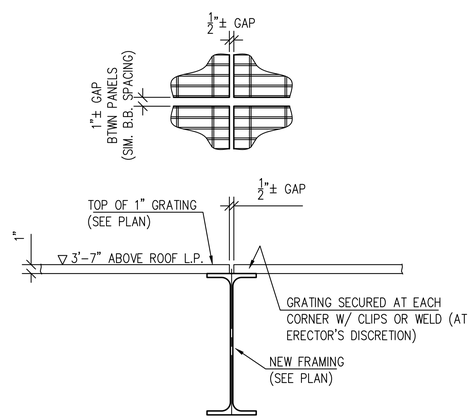

TYPICAL GRATING DETAIL
SCALE 1 1/2"=1'-0"

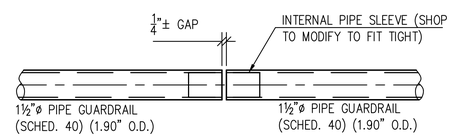

TYPICAL GUARDRAIL SPLICE DETAIL
SCALE 3"=1'-0"

FOR FAB. & ERECTION:
4/30/2020

NOTE:
STEEL TO BE AS FOLLOWS
1. WIDE FLANGE TO BE ASTM A992
2. CHANNELS, PLATES AND ANGLES TO BE ASTM A36
3. HSS TO BE ASTM A500 GRADE B

PLAN NORTH

THE FOLLOWING NOTES ARE AN INTEGRAL OF THIS DRAWING AND OUR CONTRACT:

1) THE G.C. IS TO RETURN ONE MARKED-UP COPY TO OUR OFFICE. We require review by both the architect and engineer.
2) If Architect/Engineer marks up drawing "REVISED" we will construe this action to mean we are in compliance with contract documents and, in fact, these drawings are "APPROVED" or "APPROVED AS NOTED" unless specifically stated otherwise.
3) These drawings are our interpretation of what is necessary to meet your specifications. It is most important, therefore, that they are checked by the G.C./Architect/Engineer against drawings provided by other trades to ensure proper installation to those surrounding materials.
4) This drawing is for the exclusive use of Holden Steel.
5) Work areas must be free of all obstructions prior to steel installation date. This includes ducts, pipes, electrical work, and all other obstructions which prevent direct vertical lift of steel to its final location.
6) Should roof or slab penetrations be required, the G.C. is responsible for all roof or slab provision, penetrations and subsequent fire stopping, waterproofing, flashing, etc.
7) Location of holes, clips, cuts for other trades, if required by our contract, MUST be shown and or verified by others on this drawing when submitted for approval.
8) Do not scale this drawing.
9) New steel is shown as [———————], existing steel is shown as [— — — —]

STEEL	PAINT	HOLES	BOLTS	ELECTRODES
SEE NOTE	HOT-DIP GALVANIZED	13/16"ø	3/4"ø A325 (U.N.O.)	E7018 (U.N.O.)

NO.	DATE	COMMENTS	NO.	DATE	ISSUED FOR
8	4/30/2020	STAIR – RELEASE FOR FABRICATION	1	4/30/2020	FOR FAB. & ERECTION
7	4/1/2020	PARTIAL RELEASE FOR FABRICATION	1	4/1/2020	FOR FAB. & ERECTION
6	3/30/2020	PARTIAL RELEASE FOR FABRICATION	1	3/31/2020	FOR FAB. & ERECTION
5	3/26/2020	PARTIAL RELEASE FOR FABRICATION	1	3/26/2020	FOR FAB. & ERECTION
4	3/24/2020	PARTIAL RELEASE FOR FABRICATION	1	3/24/2020	FOR FAB. & ERECTION
3	2/7/2020	REVISED PER DESIGN CHANGE	1	2/8/2020	APPROVAL
		FIRST ISSUE	1	11/6/2019	APPROVAL

REVISIONS — PRINT RECORD

DWG TITLE
ROOF DUNNAGE
FRAMING, STAIR, & GUARDRAILS

PROJECT NAME

ARCH'T –			DWG REF
ENG'R			DWG REF S-101.00 S-102.00
CONT'R		SUPER	
DRN BY TS/OC	CHK'D BY	JOB NO. 4550	SEARCH –	DWG NO. E2
DATE 11/4/19	DATE		

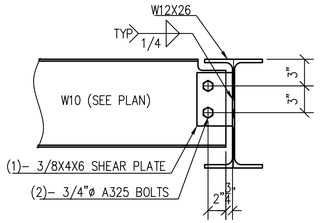

TYPICAL CONNECTION DETAIL
W10 INTO W12X26
SCALE 1 1/2"=1'–0"

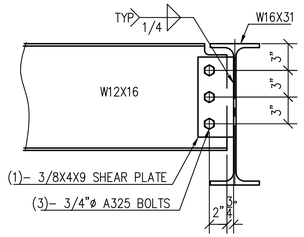

TYPICAL CONNECTION DETAIL
W12X16 INTO W16X31
SCALE 1 1/2"=1'–0"

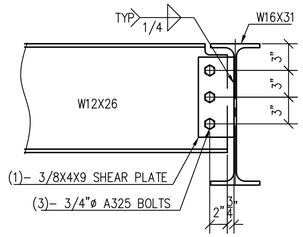

TYPICAL CONNECTION DETAIL
W12X26 INTO W16X31
SCALE 1 1/2"=1'–0"

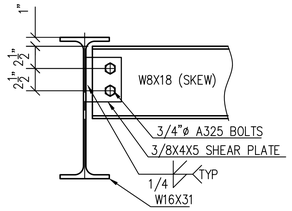

TYPICAL CONNECTION DETAIL
W8X18 (SKEW) INTO W16X31
SCALE 1 1/2"=1'–0"

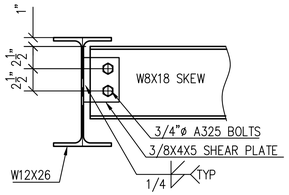

TYPICAL CONNECTION DETAIL
W8X18 (SKEW) INTO W12X26
SCALE 1 1/2"=1'–0"

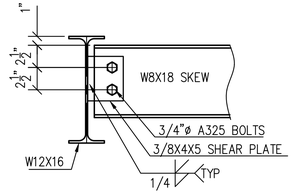

TYPICAL CONNECTION DETAIL
W8X18 (SKEW) INTO W12X16
SCALE 1 1/2"=1'–0"

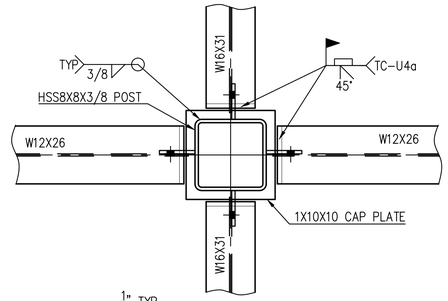

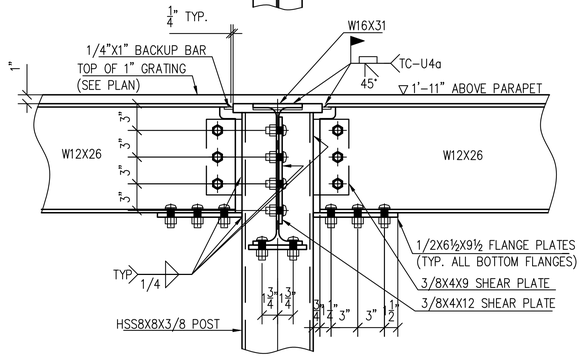

DETAIL 3
SCALE 1 1/2"=1'–0"

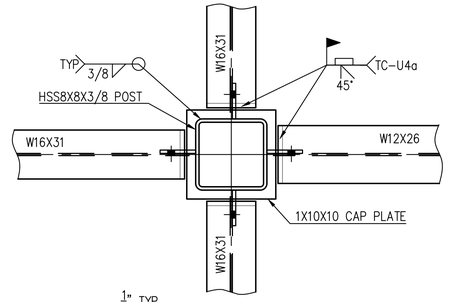

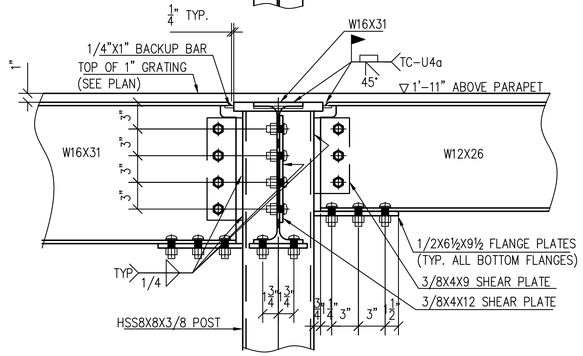

DETAIL 3A
SCALE 1 1/2"=1'–0"

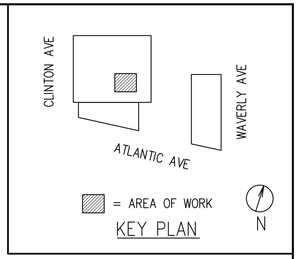

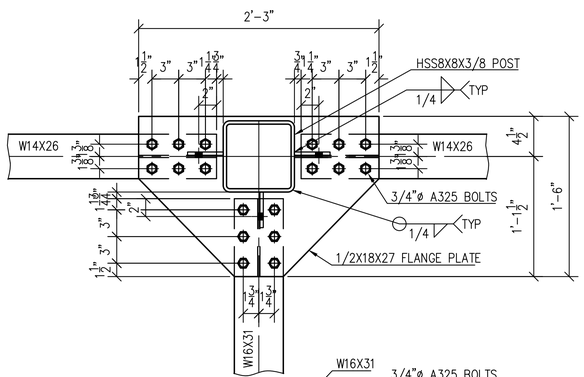

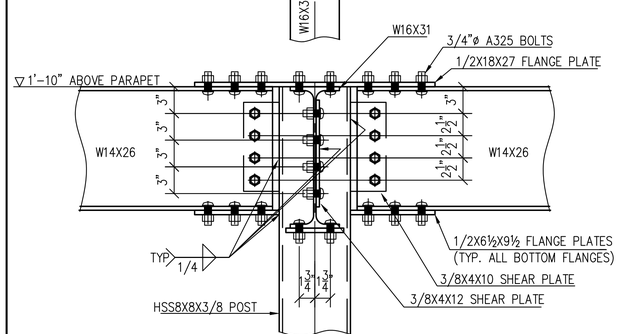

DETAIL 1
SCALE 1 1/2"=1'–0"

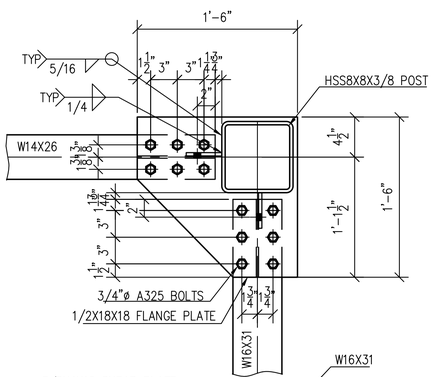

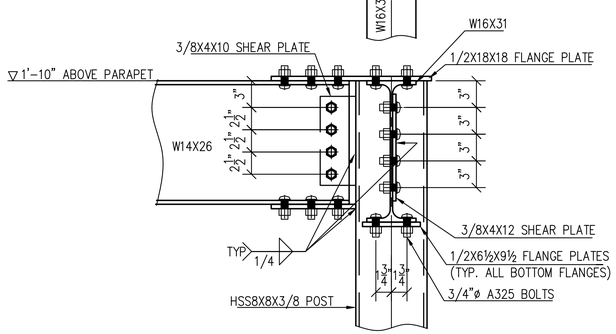

DETAIL 2
SCALE 1 1/2"=1'–0"

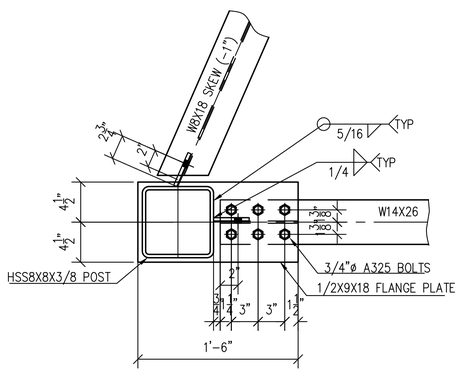

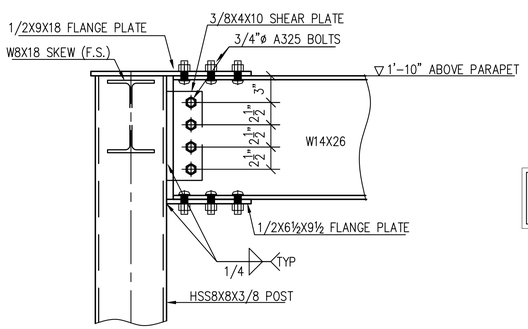

DETAIL 2A
SCALE 1 1/2"=1'–0"

FOR FAB. & ERECTION:
4/30/2020

NOTE:
STEEL TO BE AS FOLLOWS
1. WIDE FLANGE TO BE ASTM A992
2. CHANNELS, PLATES AND ANGLES TO BE ASTM A36
3. HSS TO BE ASTM A500 GRADE B

PLAN NORTH

THE FOLLOWING NOTES ARE AN INTEGRAL OF THIS DRAWING AND OUR CONTRACT:

1) THE G.C. IS TO RETURN ONE MARKED-UP COPY TO OUR OFFICE. We require review by both the architect and engineer.
2) If Architect/Engineer marks up drawing "REVISE/S" we will construe this action to mean we are in compliance with contract documents and, in fact, these drawings are "APPROVED" or "APPROVED AS NOTED" unless specifically stated otherwise.
3) These drawings are our interpretation of what is necessary to meet your specifications. It is most important, therefore, that they are checked by the G.C./Architect/Engineer against drawings provided by other trades to ensure proper installation to those surrounding materials.
4) This drawing is for the exclusive use of Hidden Steel.
5) Work areas must be free of all obstructions prior to steel installation date. This includes ducts, pipes, electrical work, and all other obstructions which prevent direct vertical lift of steel to its final location.
6) Should roof or slab penetrations be required, the G.C. is responsible for all roof or slab provision, penetrations and subsequent fire stopping, waterproofing, flashing, etc.
7) Location of holes, slips, cuts for other trades, if required by our contract, MUST be shown and or verified by others on this drawing when submitted for approval.
8) Do not scale this drawing.
9) New steel is shown as [———————], existing steel is shown as [—— —— ——]

STEEL	PAINT	HOLES	BOLTS	ELECTRODES
SEE NOTE	HOT–DIP GALVANIZED	13/16"ø	3/4"ø A325 (U.N.O.)	E7018 (U.N.O.)

NO.	DATE	COMMENTS	NO.	DATE	ISSUED FOR
6	4/30/2020	STAIR – RELEASE FOR FABRICATION	1	4/30/2020	FOR FAB. & ERECTION
5	4/1/2020	PARTIAL RELEASE FOR FABRICATION	1	4/1/2020	FOR FAB. & ERECTION
4	3/30/2020	PARTIAL RELEASE FOR FABRICATION	1	3/31/2020	FOR FAB. & ERECTION
3	3/26/2020	PARTIAL RELEASE FOR FABRICATION	1	3/26/2020	FOR FAB. & ERECTION
2	3/24/2020	PARTIAL RELEASE FOR FABRICATION	1	3/24/2020	FOR FAB. & ERECTION
1	2/7/2020	REVISED PER DESIGN CHANGE	1	2/8/2020	APPROVAL
		FIRST ISSUE	1	11/8/2019	APPROVAL

REVISIONS — PRINT RECORD

DWG TITLE
ROOF DUNNAGE
FRAMING, STAIR, & GUARDRAILS

PROJECT NAME

ARCH'T –			DWG REF
ENG'R			DWG REF S–101.00 S–102.00
CONT'R			SUPER
DRN BY TS/OC	CHK'D BY	JOB NO. 4550	SEARCH –	DWG NO. E3
DATE 11/4/19	DATE		

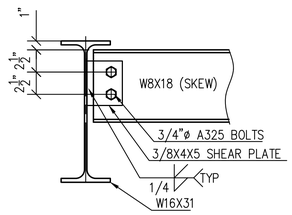

TYPICAL CONNECTION DETAIL
W8X18 (SKEW) INTO W16X31
SCALE 1 1/2"=1'-0"

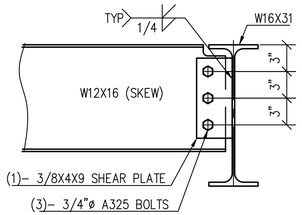

TYPICAL CONNECTION DETAIL
W12X16 (SKEW) INTO W16X31
SCALE 1 1/2"=1'-0"

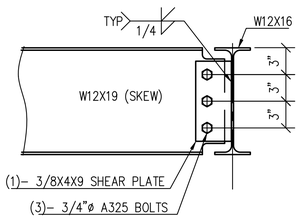

TYPICAL CONNECTION DETAIL
W12X19 (SKEW) INTO W12X16
SCALE 1 1/2"=1'-0"

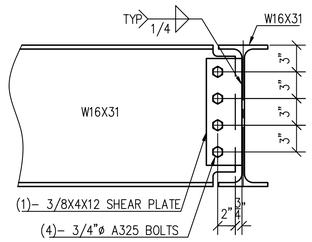

TYPICAL CONNECTION DETAIL
W16X31 INTO W16X31
SCALE 1 1/2"=1'-0"

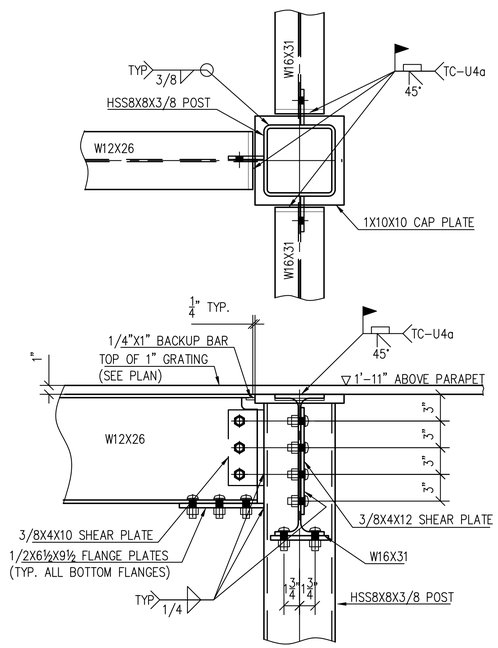

DETAIL 4
SCALE 1 1/2"=1'-0"

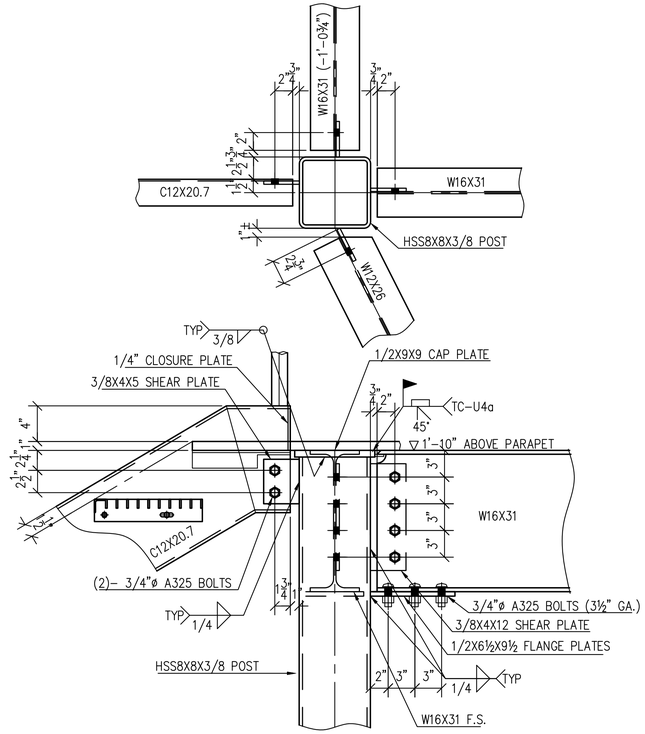

NOTE: W12 BRACE NOT SHOWN (FOR CLARITY)

DETAIL 6
SCALE 1 1/2"=1'-0"

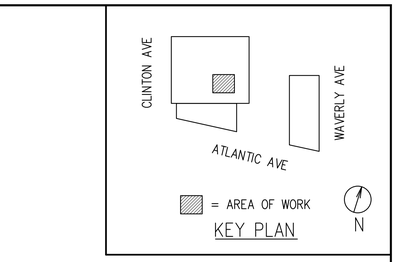

KEY PLAN

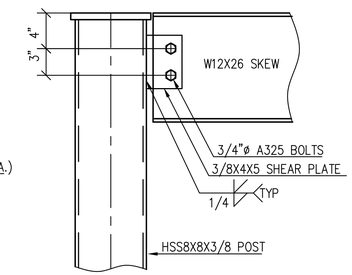

CONNECTION DETAIL
W12X26 INTO POST
SCALE 1 1/2"=1'-0"

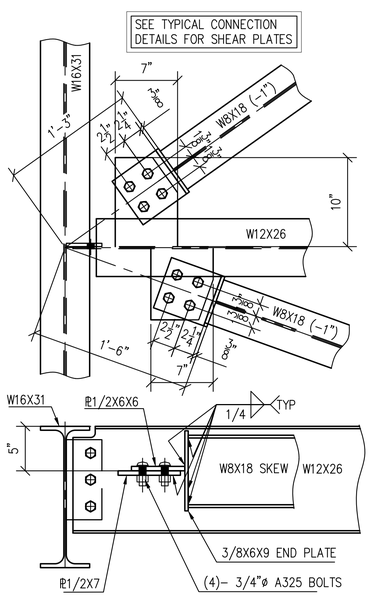

DETAIL 8
SCALE 1 1/2"=1'-0"

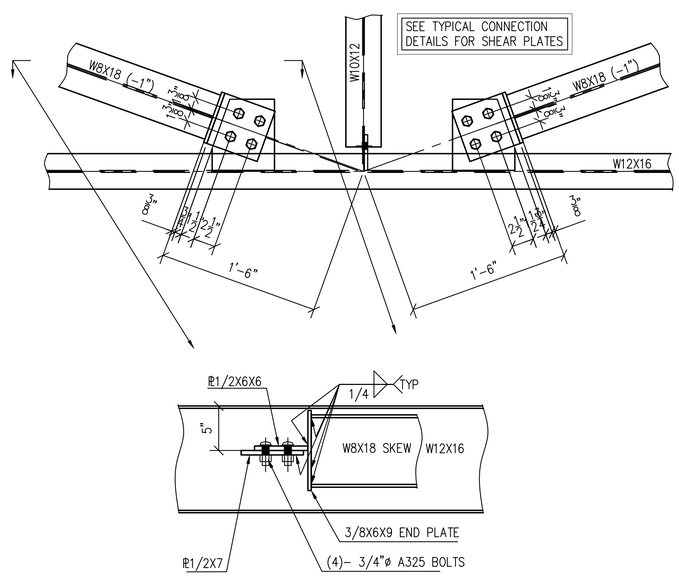

DETAIL 9
SCALE 1 1/2"=1'-0"

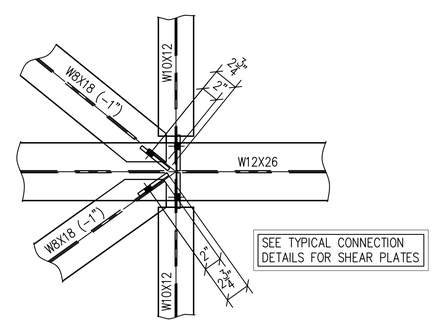

DETAIL 7
SCALE 1 1/2"=1'-0"

FOR FAB. & ERECTION:
4/30/2020

NOTE:
STEEL TO BE AS FOLLOWS
1. WIDE FLANGE TO BE ASTM A992
2. CHANNELS, PLATES AND ANGLES TO BE ASTM A36
3. HSS TO BE ASTM A500 GRADE B

PLAN NORTH

THE FOLLOWING NOTES ARE AN INTEGRAL OF THIS DRAWING AND OUR CONTRACT:

1) THE G.C. IS TO RETURN ONE MARKED-UP COPY TO OUR OFFICE. We require review by both the architect and engineer.
2) If Architect/Engineer marks up drawing "REVIEWED" we will construe this action to mean we are in compliance with contract documents and, in fact, these drawings are "APPROVED" or "APPROVED AS NOTED" unless specifically stated otherwise.
3) These drawings are our interpretation of what is necessary to meet your specifications. It is most important, therefore, that they are checked by the G.C./Architect/Engineer against drawings provided by other trades to assure proper installation to those surrounding materials.
4) This drawing is for the exclusive use of Hallen Steel.
5) Work areas must be free of all obstructions prior to steel installation date. This includes ducts, pipes, electrical work, and all other obstructions which prevent direct vertical lift of steel to its final location.
6) Should roof or slab penetrations be required, the G.C. is responsible for all roof or slab provision, penetrations and subsequent fire stopping, waterproofing, flashing, etc.
7) Location of holes, clips, cuts for other trades, if required by our contract, MUST be shown and or verified by others on this drawing when submitted for approval.
8) Do not scale this drawing.
9) New steel is shown as ├──────┤; existing steel is shown as [── ── ──]

STEEL	PAINT	HOLES	BOLTS	ELECTRODES
SEE NOTE	HOT-DIP GALVANIZED	13/16"ø	3/4"ø A325 (U.N.O.)	E7018 (U.N.O.)

NO.	DATE	COMMENTS	NO.	DATE	ISSUED FOR
4	4/30/2020	STAIR – RELEASE FOR FABRICATION	1	4/30/2020	FOR FAB. & ERECTION
3	4/1/2020	PARTIAL RELEASE FOR FABRICATION	1	4/1/2020	FOR FAB. & ERECTION
2	3/30/2020	PARTIAL RELEASE FOR FABRICATION	1	3/31/2020	FOR FAB. & ERECTION
1	3/26/2020	PARTIAL RELEASE FOR FABRICATION	1	3/26/2020	FOR FAB. & ERECTION
2	3/24/2020	PARTIAL RELEASE FOR FABRICATION	1	3/24/2020	FOR FAB. & ERECTION
1	2/7/2020	REVISED PER DESIGN CHANGE	1	2/8/2020	APPROVAL
		FIRST ISSUE	1	11/8/2019	APPROVAL

REVISIONS — PRINT RECORD

DWG TITLE
ROOF DUNNAGE
FRAMING, STAIR, & GUARDRAILS

PROJECT NAME

ARCH'T –			DWG REF
ENG'R			DWG REF S-101.00 S-102.00
CONT'R			SUPER
DRN BY TS/OC	CHK'D BY	JOB NO. 4550	SEARCH –	DWG NO. E4
DATE 11/4/19	DATE			

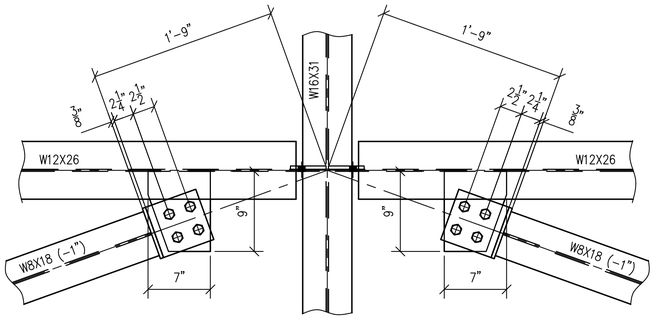

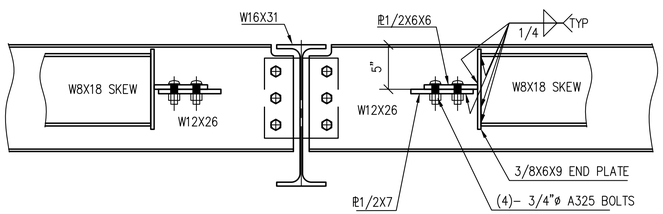

DETAIL 10
SCALE 1 1/2"=1'-0"

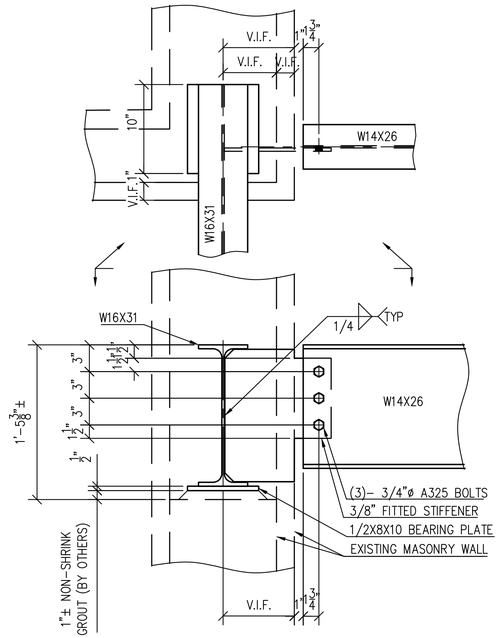

DETAIL 11
SCALE 1 1/2"=1'-0"

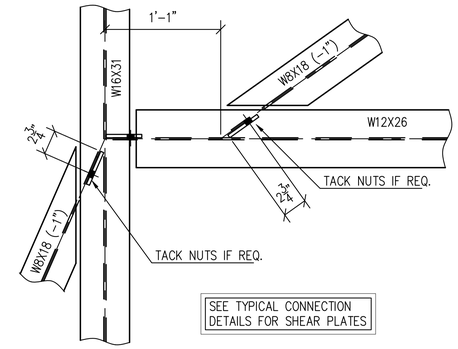

DETAIL 14
SCALE 1 1/2"=1'-0"

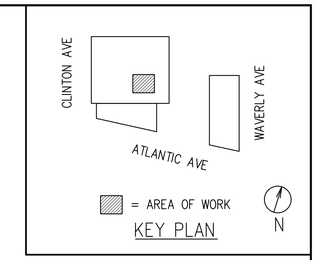

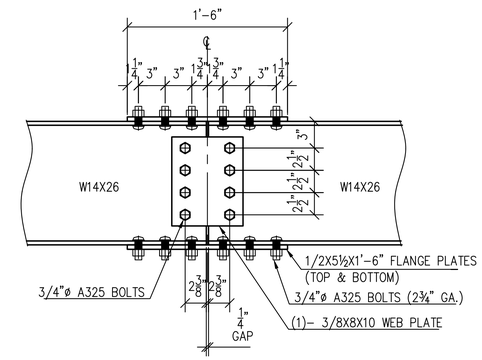

W14X26 SPLICE DETAIL
SCALE 1 1/2"=1'-0"

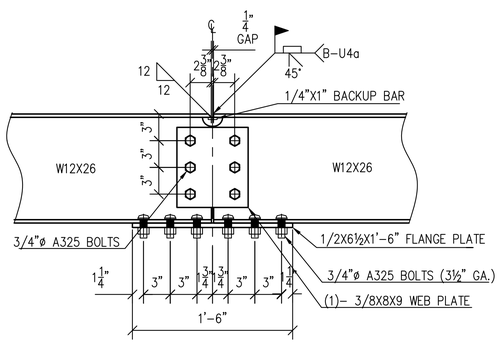

W12X26 SPLICE DETAIL
SCALE 1 1/2"=1'-0"

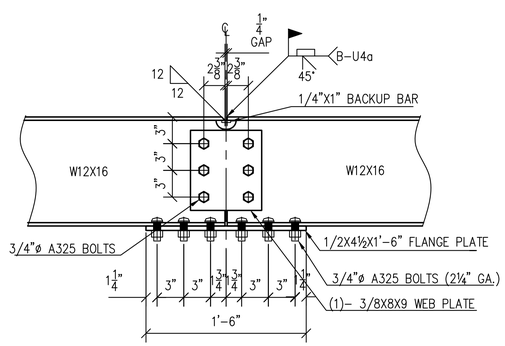

W12X16 SPLICE DETAIL
SCALE 1 1/2"=1'-0"

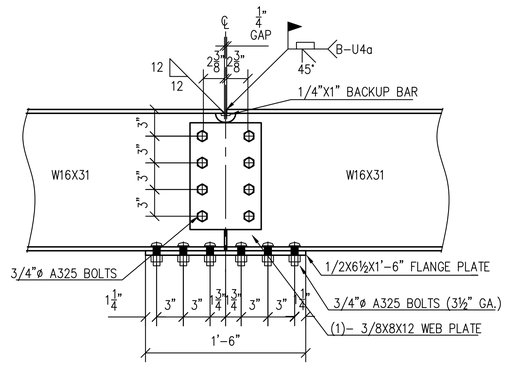

W16X31 SPLICE DETAIL
SCALE 1 1/2"=1'-0"

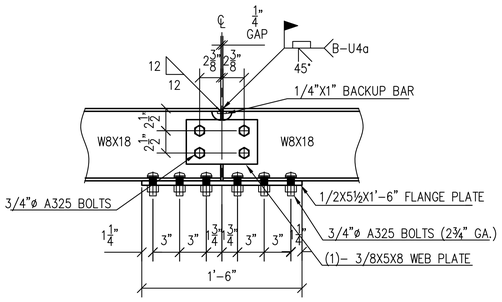

W8X18 SPLICE DETAIL
SCALE 1 1/2"=1'-0"

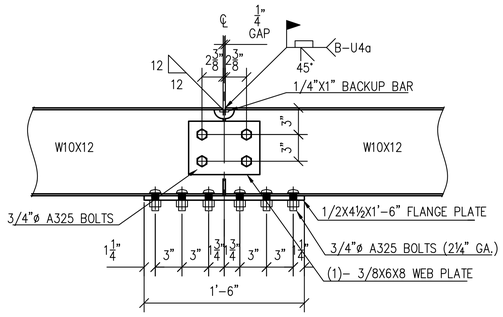

W10X12 SPLICE DETAIL
SCALE 1 1/2"=1'-0"

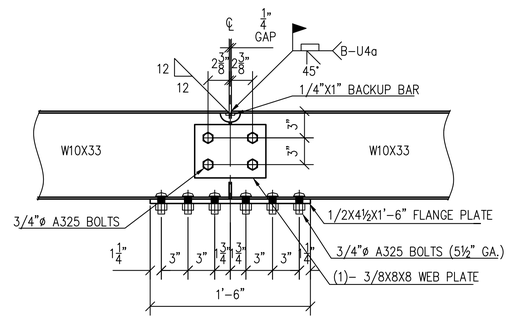

W10X33 SPLICE DETAIL
SCALE 1 1/2"=1'-0"

NOTE:
STEEL TO BE AS FOLLOWS
1. WIDE FLANGE TO BE ASTM A992
2. CHANNELS, PLATES AND ANGLES TO BE ASTM A36
3. HSS TO BE ASTM A500 GRADE B

FOR FAB. & ERECTION:
4/30/2020

PLAN NORTH

THE FOLLOWING NOTES ARE AN INTEGRAL OF THIS DRAWING AND OUR CONTRACT:

1) WE G.C. TO RETURN ONE MARKED-UP COPY TO OUR OFFICE. We require review by both the architect and engineer.
2) If Architect/Engineer marks up drawing "REVIEWED" we will construe this action to mean we are in compliance with contract documents and, in fact, these drawings are "APPROVED" or "APPROVED AS NOTED" unless specifically stated otherwise.
3) These drawings are our interpretation of what is necessary to meet your specifications. It is most important, therefore, that they are checked by the G.C./Architect/Engineer against drawings provided by other trades to ensure proper installation to these surrounding materials.
4) This drawing is for the exclusive use of Hollen Steel.
5) Work areas must be free of all obstructions prior to steel installation date. This includes ducts, pipes, electrical work, and all other obstructions which prevent direct vertical lift of steel to its final location.
6) Should roof or slab penetrations be required, the G.C. is responsible for all roof or slab provision, penetrations and subsequent fire stopping, waterproofing, flashing, etc.
7) Location of holes, clips, cuts for other trades, if required by our contract, MUST be shown and or verified by others on this drawing when submitted for approval.
8) Do not scale this drawing.
9) New steel is shown as [———————], existing steel is shown as [—— —— ——]

STEEL	PAINT	HOLES	BOLTS	ELECTRODES
SEE NOTE	HOT-DIP GALVANIZED	13/16"ø	3/4"ø A325 (U.N.O.)	E7018 (U.N.O.)

NO.	DATE	COMMENTS	NO.	DATE	ISSUED FOR
6	4/30/2020	STAIR – RELEASE FOR FABRICATION	1	4/30/2020	FOR FAB. & ERECTION
5	4/1/2020	PARTIAL RELEASE FOR FABRICATION	1	4/1/2020	FOR FAB. & ERECTION
4	3/30/2020	PARTIAL RELEASE FOR FABRICATION	1	3/31/2020	FOR FAB. & ERECTION
3	3/26/2020	PARTIAL RELEASE FOR FABRICATION	1	3/26/2020	FOR FAB. & ERECTION
2	3/24/2020	PARTIAL RELEASE FOR FABRICATION	1	3/24/2020	FOR FAB. & ERECTION
1	2/7/2020	REVISED PER DESIGN CHANGE	1	2/8/2020	APPROVAL
		FIRST ISSUE	1	11/8/2019	APPROVAL

REVISIONS — PRINT RECORD

DWG TITLE
ROOF DUNNAGE
FRAMING, STAIR, & GUARDRAILS

PROJECT NAME

ARCH'T –			DWG REF
ENG'R			DWG REF S-101.00 S-102.00
CONT'R			SUPER
DRN BY TS/OC	CHK'D BY	JOB NO. 4550	SEARCH –	DWG NO. E5
DATE 11/4/19	DATE		

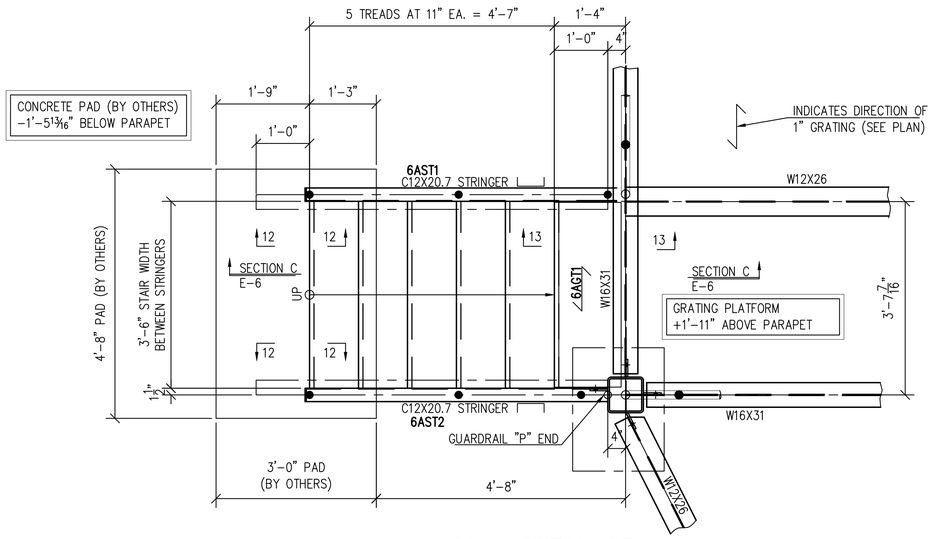

PLAN DETAIL ST1

SCALE 3/4"=1'-0"

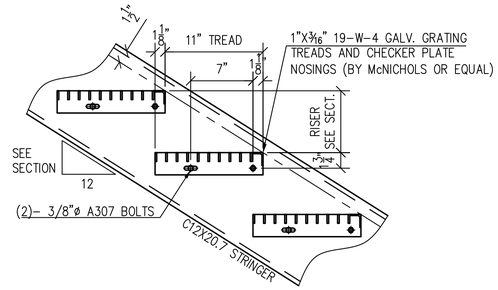

TYPICAL TREAD DETAIL

SCALE 1 1/2"=1'-0"

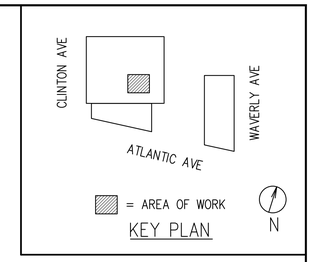

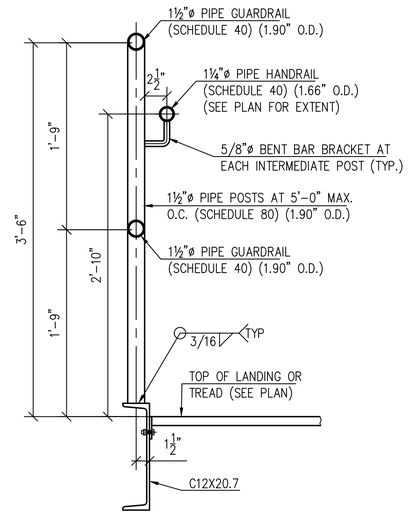

TYPICAL GUARDRAIL DETAIL

SCALE 1 1/2"=1'-0"

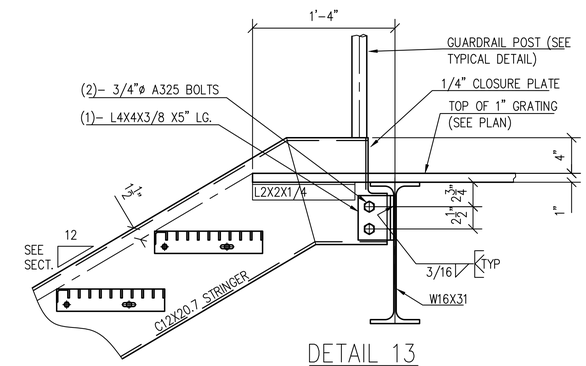

DETAIL 13

SCALE 1 1/2"=1'-0"

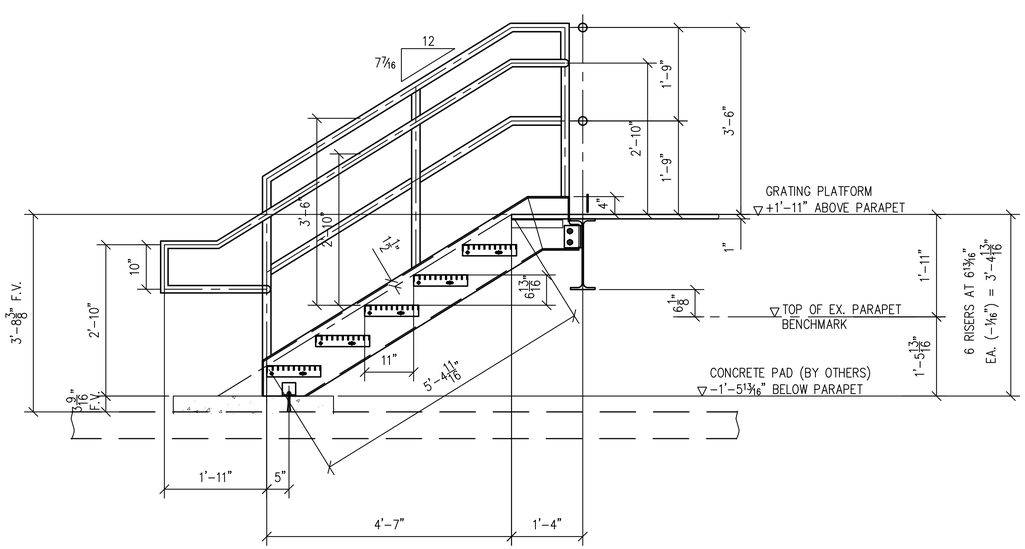

SECTION C

SCALE 3/4"=1'-0"

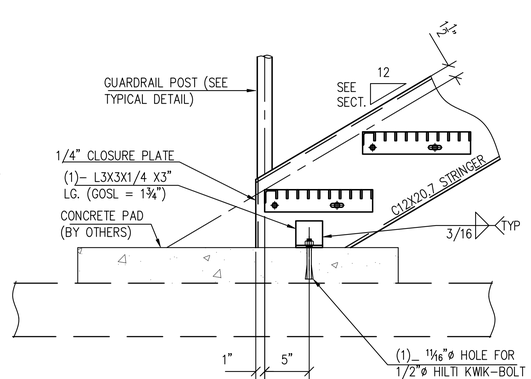

DETAIL 12

SCALE 1 1/2"=1'-0"

PLAN NORTH

THE FOLLOWING NOTES ARE AN INTEGRAL OF THIS DRAWING AND OUR CONTRACT:

1) THE G.C. IS TO RETURN ONE MARKED-UP COPY TO OUR OFFICE. We require review by both the architect and engineer.
2) If Architect/Engineer marks up drawing "REVISE/R" we will construe this action to mean: we are in compliance with contract documents and, in fact, these drawings are "APPROVED" or "APPROVED AS NOTED" unless specifically stated otherwise.
3) These drawings are our interpretation of what is necessary to meet your specifications. It is most important, therefore, that they are checked by the G.C./Architect/Engineer against drawings provided by other trades to ensure proper installation to those surrounding materials.
4) This drawing is for the exclusive use of Hidden Steel.
5) Work areas must be free of all obstructions prior to steel installation date. This includes ducts, pipes, electrical work, and all other obstructions which prevent direct verified lift of steel to its final location.
6) Should roof or slab penetrations be required, the G.C. is responsible for all roof or slab provision, penetrations and subsequent fire stopping, waterproofing, flashing, etc.
7) Location of holes, clips, cuts for other trades, if required by our contract, MUST be shown and or verified by others on this drawing when submitted for approval.
8) Do not scale this drawing.
9) New steel is shown as [———————], existing steel is shown as [— — — —]

STEEL	PAINT	HOLES	BOLTS	ELECTRODES
SEE NOTE	HOT-DIP GALVANIZED	13/16"ø	3/4"ø A325 (U.N.O.)	E7018 (U.N.O.)

NO.	DATE	COMMENTS	NO.	DATE	ISSUED FOR
6	4/30/2020	STAIR – RELEASE FOR FABRICATION	1	4/30/2020	FOR FAB. & ERECTION
5	4/1/2020	PARTIAL RELEASE FOR FABRICATION	1	4/1/2020	FOR FAB. & ERECTION
4	3/30/2020	PARTIAL RELEASE FOR FABRICATION	1	3/31/2020	FOR FAB. & ERECTION
3	3/26/2020	PARTIAL RELEASE FOR FABRICATION	1	3/26/2020	FOR FAB. & ERECTION
2	3/24/2020	PARTIAL RELEASE FOR FABRICATION	1	3/24/2020	FOR FAB. & ERECTION
1	2/7/2020	REVISED PER DESIGN CHANGE	1	2/8/2020	APPROVAL
		FIRST ISSUE	1	11/8/2019	APPROVAL

REVISIONS — PRINT RECORD

FOR FAB. & ERECTION:
4/30/2020

NOTE:
STEEL TO BE AS FOLLOWS
1. WIDE FLANGE TO BE ASTM A992
2. CHANNELS, PLATES AND ANGLES TO BE ASTM A36
3. HSS TO BE ASTM A500 GRADE B

DWG TITLE
ROOF DUNNAGE
FRAMING, STAIR, & GUARDRAILS

PROJECT NAME

ARCH'T –			DWG REF	
ENG'R			DWG REF	S-101.00 S-102.00
CONT'R			SUPER	
DRN BY TS/OC	CHK'D BY	JOB NO. 4550	SEARCH –	DWG NO. E6
DATE 11/4/19	DATE			

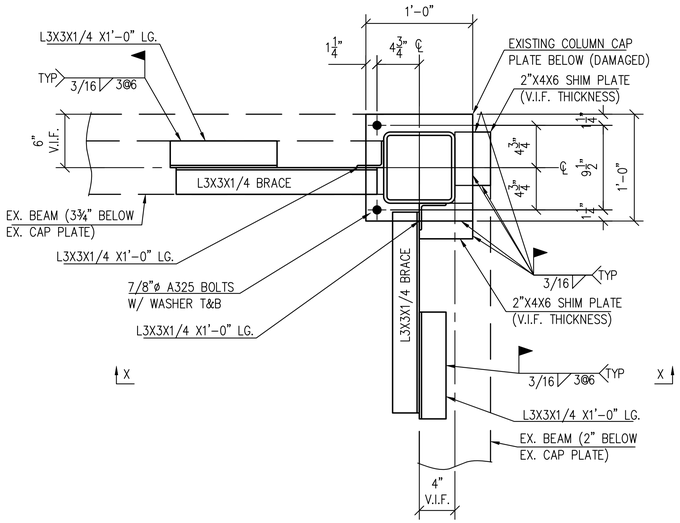

DETAIL 15

COLUMN 33
SCALE 1 1/2"=1'-0"

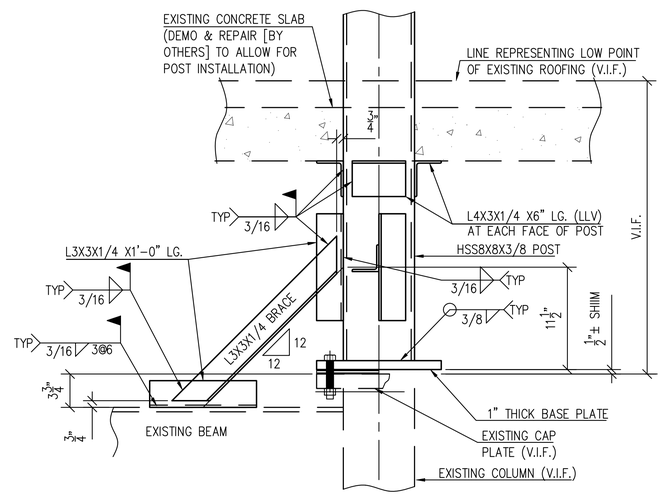

SECTION X–X

SCALE 1 1/2"=1'-0"

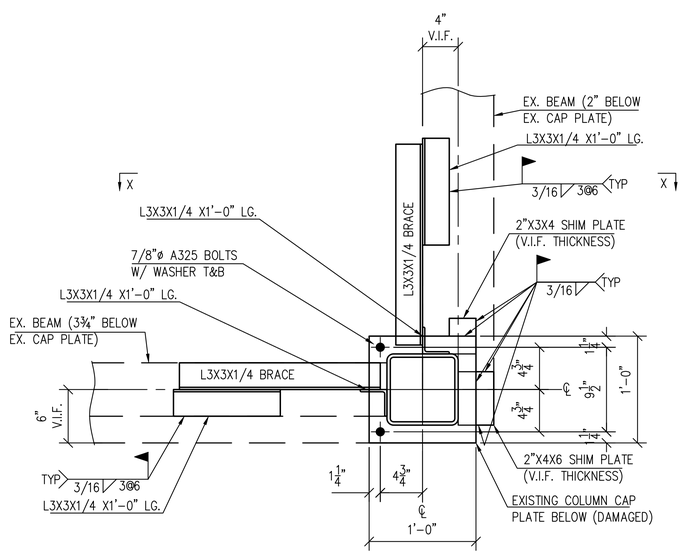

DETAIL 16

COLUMN 35
SCALE 1 1/2"=1'-0"

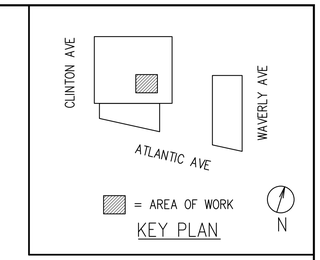

KEY PLAN

FOR FAB. & ERECTION:
4/30/2020

NOTE:
STEEL TO BE AS FOLLOWS
1. WIDE FLANGE TO BE ASTM A992
2. CHANNELS, PLATES AND ANGLES TO BE ASTM A36
3. HSS TO BE ASTM A500 GRADE B

PLAN NORTH

THE FOLLOWING NOTES ARE AN INTEGRAL OF THIS DRAWING AND OUR CONTRACT:

1) THE G.C. IS TO RETURN ONE MARKED-UP COPY TO OUR OFFICE. We require review by both the architect and engineer.
2) If Architect/Engineer marks up drawing "REVISE/R" we will construe this action to mean we are in compliance with contract documents and, in fact, these drawings are "APPROVED" or "APPROVED AS NOTED" unless specifically stated otherwise.
3) These drawings are our interpretation of what is necessary to meet your specifications. It is most important, therefore, that they are checked by the G.C./Architect/Engineer against drawings provided by other trades to ensure proper installation to those surrounding materials.
4) This drawing is for fire exclusive use of Hidden Steel.
5) Work areas must be free of all obstructions prior to steel installation date. This includes ducts, pipes, electrical work, and all other obstructions which prevent direct vertical lift of steel to its final location.
6) Should roof or slab penetrations be required, the G.C. is responsible for all roof or slab proection, penetrations and subsequent fire stopping, waterproofing, flashing, etc.
7) Location of holes, clips, cuts for other trades, if required by our contract, MUST be shown and or verified by others on this drawing when submitted for approval.
8) Do not scale this drawing.
9) Nine steel is shown as [————————], existing steel is shown as [—— —— ——]

STEEL	PAINT	HOLES	BOLTS	ELECTRODES
SEE NOTE	HOT–DIP GALVANIZED	13/16"ø	3/4"ø A325 (U.N.O.)	E7018 (U.N.O.)

NO.	DATE	COMMENTS	NO.	DATE	ISSUED FOR
6	4/30/2020	STAIR – RELEASE FOR FABRICATION	1	4/30/2020	FOR FAB. & ERECTION
5	4/1/2020	PARTIAL RELEASE FOR FABRICATION	1	4/1/2020	FOR FAB. & ERECTION
4	3/30/2020	PARTIAL RELEASE FOR FABRICATION	1	3/31/2020	FOR FAB. & ERECTION
3	3/26/2020	PARTIAL RELEASE FOR FABRICATION	1	3/26/2020	FOR FAB. & ERECTION
2	3/24/2020	PARTIAL RELEASE FOR FABRICATION	1	3/24/2020	FOR FAB. & ERECTION
1	2/7/2020	REVISED PER DESIGN CHANGE	1	2/8/2020	APPROVAL
		FIRST ISSUE	1	11/8/2019	APPROVAL

REVISIONS — PRINT RECORD

DWG TITLE
ROOF DUNNAGE
FRAMING, STAIR, & GUARDRAILS

PROJECT NAME

ARCH'T –				DWG REF
ENG'R				DWG REF S–101.00 S–102.00
CONT'R			SUPER	
DRN BY TS/OC	CHK'D BY	JOB NO. 4550	SEARCH –	DWG NO. E7
DATE 11/4/19	DATE			

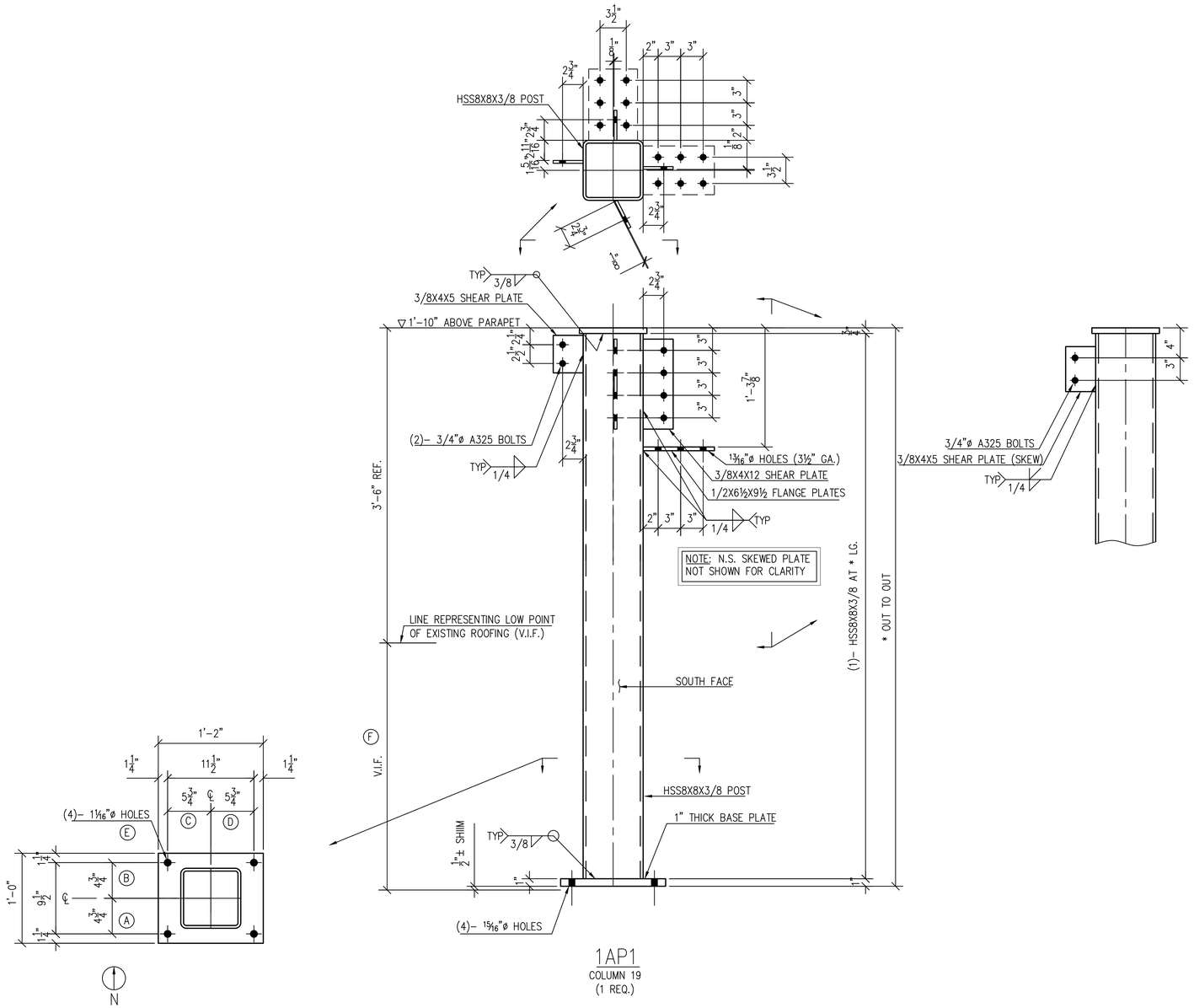

1AP1
COLUMN 19
(1 REQ.)

NOTE:
STEEL TO BE AS FOLLOWS
1. WIDE FLANGE TO BE ASTM A992
2. CHANNELS, PLATES AND ANGLES TO BE ASTM A36
3. HSS TO BE ASTM A500 GRADE B

FOR FAB. & ERECTION:
4/30/2020

PLAN NORTH

THE FOLLOWING NOTES ARE AN INTEGRAL OF THIS DRAWING AND OUR CONTRACT:

1) THE G.C. IS TO RETURN ONE MARKED-UP COPY TO OUR OFFICE. We require review by both the architect and engineer.
2) If Architect/Engineer marks up drawing "REVISED" we will construe this action to mean we are in compliance with contract documents and, in fact, these drawings are "APPROVED" or "APPROVED AS NOTED" unless specifically stated otherwise.
3) These drawings are our interpretation of what is necessary to meet your specifications. It is most important, therefore, that they are checked by the G.C./Architect/Engineer against drawings provided by other trades to ensure proper installation to those surrounding materials.
4) This drawing is for the exclusive use of Walden Steel.
5) Work areas must be free of all obstructions prior to steel installation date. This includes ducts, pipes, electrical work, and all other obstructions which prevent direct vertical lift of steel to its final location.
6) Should roof or slab penetrations be required, the G.C. is responsible for all roof or slab provision, penetrations and subsequent fire stopping, waterproofing, flashing, etc.
7) Location of holes, clips, cuts for other trades, if required by our contract, MUST be shown and or verified by others on this drawing when submitted for approval.
8) Do not scale this drawing.
9) New steel is shown as [———————], existing steel is shown as [—— —— ——]

STEEL	PAINT	HOLES	BOLTS	ELECTRODES
SEE NOTE	HOT-DIP GALVANIZED	13/16"ø	3/4"ø A325 (U.N.O.)	E7018 (U.N.O.)

NO.	DATE	COMMENTS	NO.	DATE	ISSUED FOR
6	4/30/2020	STAIR – RELEASE FOR FABRICATION	1	4/30/2020	FOR FAB. & ERECTION
5	4/1/2020	PARTIAL RELEASE FOR FABRICATION	1	4/1/2020	FOR FAB. & ERECTION
4	3/30/2020	PARTIAL RELEASE FOR FABRICATION	1	3/31/2020	FOR FAB. & ERECTION
3	3/26/2020	PARTIAL RELEASE FOR FABRICATION	1	3/26/2020	FOR FAB. & ERECTION
2	3/24/2020	PARTIAL RELEASE FOR FABRICATION	1	3/24/2020	FOR FAB. & ERECTION
1	2/7/2020	REVISED PER DESIGN CHANGE	1	2/8/2020	APPROVAL
		FIRST ISSUE	1	11/8/2019	APPROVAL

REVISIONS — PRINT RECORD

DWG TITLE
ROOF DUNNAGE
FRAMING, STAIR, & GUARDRAILS

PROJECT NAME

ARCH'T –
DWG REF
ENG'R
DWG REF S-101.00 S-102.00
CONT'R
SUPER

DRN BY	CHK'D BY	JOB NO.	SEARCH	DWG NO.
TS/OC		4550	–	1A
DATE 11/4/19	DATE			

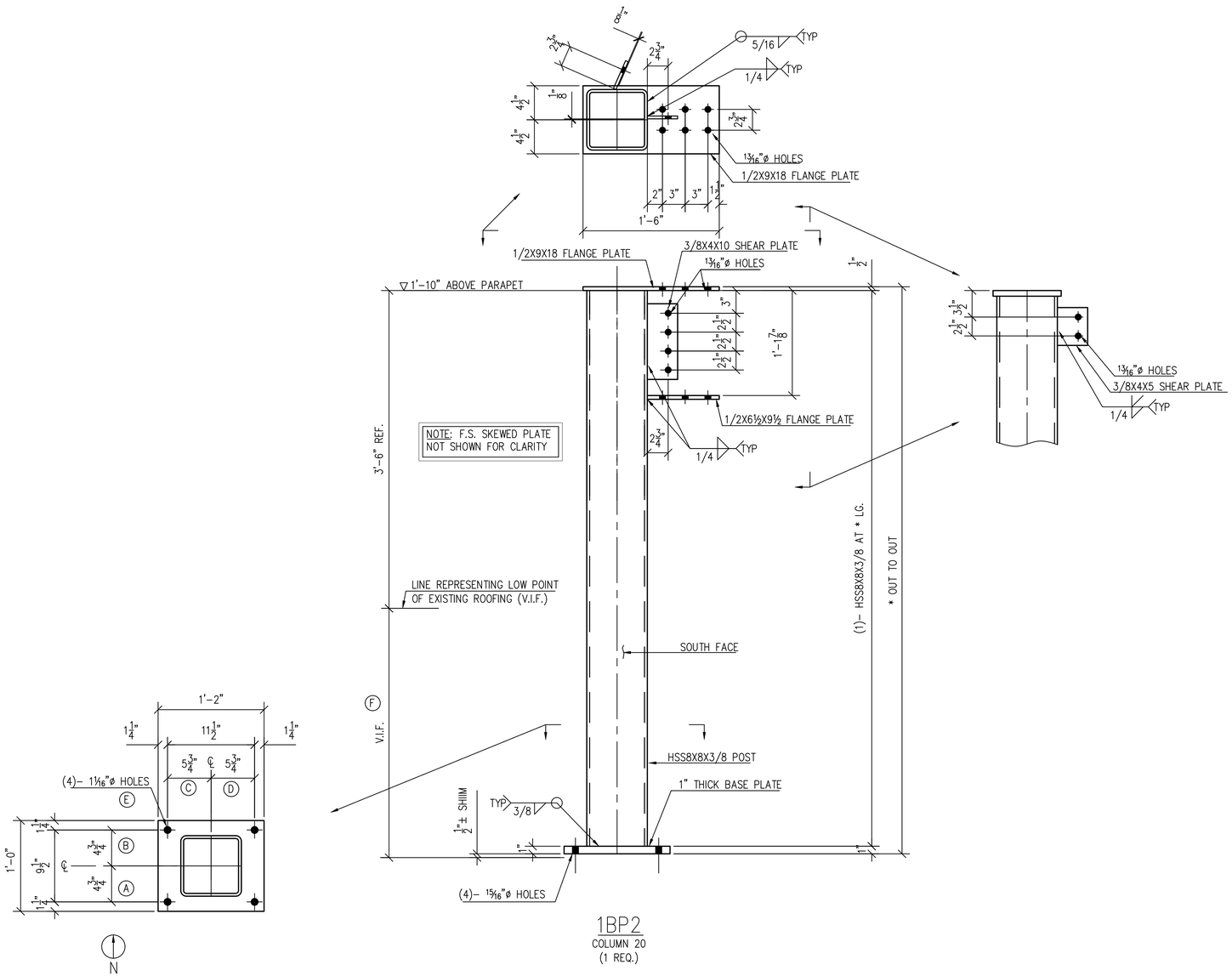

1BP2
COLUMN 20
(1 REQ.)

FOR FAB. & ERECTION:
4/30/2020

NOTE:
STEEL TO BE AS FOLLOWS
1. WIDE FLANGE TO BE ASTM A992
2. CHANNELS, PLATES AND ANGLES TO BE ASTM A36
3. HSS TO BE ASTM A500 GRADE B

PLAN NORTH

THE FOLLOWING NOTES ARE AN INTEGRAL OF THIS DRAWING AND OUR CONTRACT:

1) THE G.C. IS TO RETURN ONE MARKED-UP COPY TO OUR OFFICE. We require review by both the architect and engineer.
2) If Architect/Engineer marks up drawing "REVISED" we will construe this action to mean we are in compliance with contract documents and, in fact, these drawings are "APPROVED" or "APPROVED AS NOTED" unless specifically stated otherwise.
3) These drawings are our interpretation of what is necessary to meet your specifications. It is most important, therefore, that they are checked by the G.C./Architect/Engineer against drawings provided by other trades to ensure proper installation to those surrounding materials.
4) This drawing is for the exclusive use of Hallen Steel.
5) Work areas must be free of all obstructions prior to steel installation date. This includes ducts, pipes, electrical work, and all other obstructions which prevent direct vertical lift of steel to its final location.
6) Should roof or slab penetrations be required, the G.C. is responsible for all roof or slab procution, penetrations and subsequent fire stopping, waterproofing, flashing, etc.
7) Location of holes, clips, cuts for other trades, if required by our contract, MUST be shown and or verified by others on this drawing when submitted for approval.
8) Do not scale this drawing.
9) New steel is shown as [———] existing steel is shown as [— — —]

STEEL	PAINT	HOLES	BOLTS	ELECTRODES
SEE NOTE	HOT-DIP GALVANIZED	13/16"ø	3/4"ø A325 (U.N.O.)	E7018 (U.N.O.)

NO.	DATE	COMMENTS	NO.	DATE	ISSUED FOR
5	4/30/2020	STAIR – RELEASE FOR FABRICATION	1	4/30/2020	FOR FAB. & ERECTION
4	4/1/2020	PARTIAL RELEASE FOR FABRICATION	1	4/1/2020	FOR FAB. & ERECTION
3	3/30/2020	PARTIAL RELEASE FOR FABRICATION	1	3/31/2020	FOR FAB. & ERECTION
2	3/26/2020	PARTIAL RELEASE FOR FABRICATION	1	3/26/2020	FOR FAB. & ERECTION
1	3/24/2020	PARTIAL RELEASE FOR FABRICATION	1	3/24/2020	FOR FAB. & ERECTION
	2/7/2020	REVISED PER DESIGN CHANGE	1	2/8/2020	APPROVAL
		FIRST ISSUE	1	11/8/2019	APPROVAL

REVISIONS — PRINT RECORD

DWG TITLE
ROOF DUNNAGE
FRAMING, STAIR, & GUARDRAILS

PROJECT NAME

ARCH'T –			DWG REF
ENG'R			DWG REF S-101.00 S-102.00
CONT'R			SUPER
DRN BY TS/OC	CHK'D BY	JOB NO. 4550	SEARCH –	DWG NO. 1B
DATE 11/4/19	DATE			

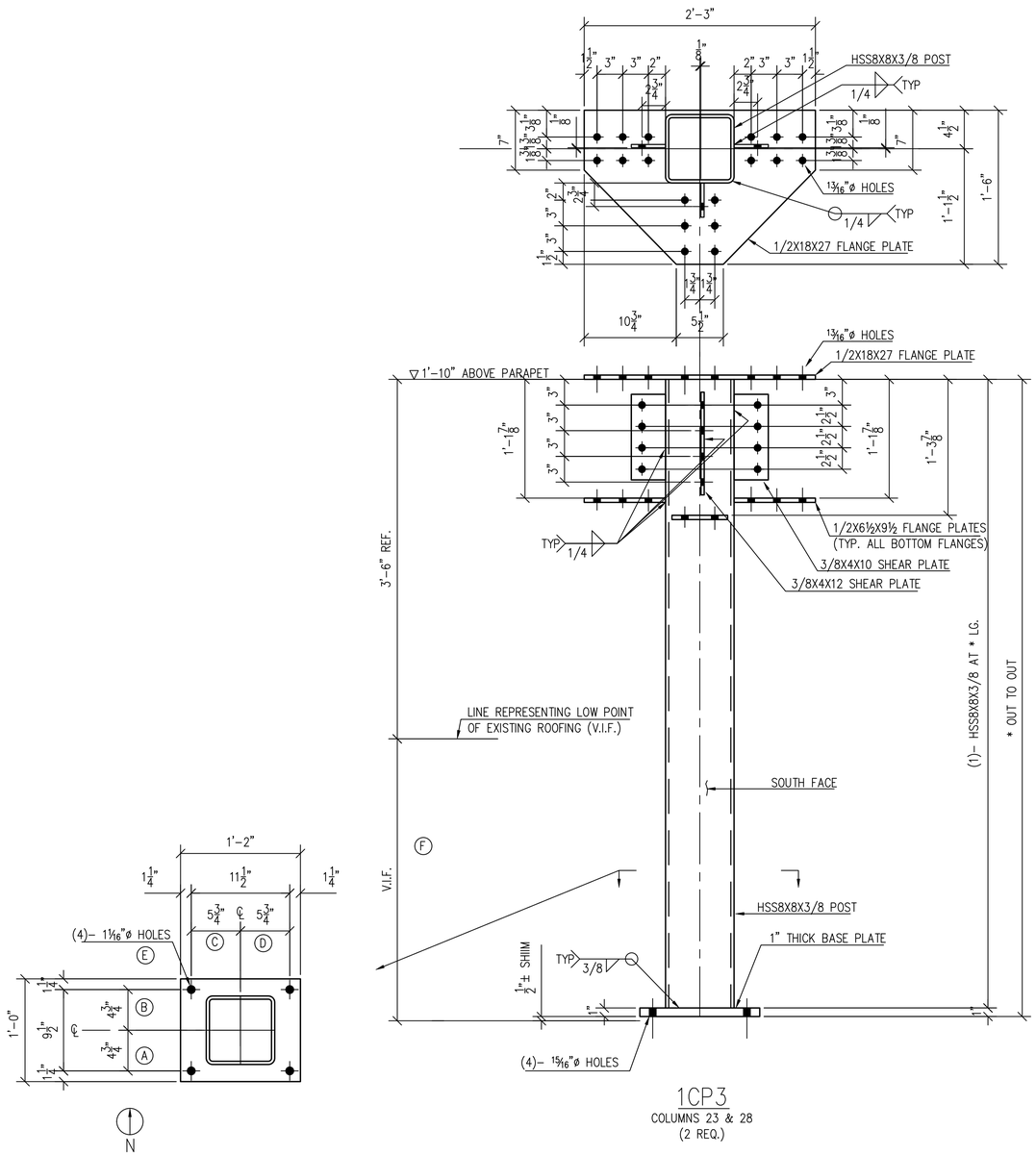

1CP3
COLUMNS 23 & 28
(2 REQ.)

NOTE:
STEEL TO BE AS FOLLOWS
1. WIDE FLANGE TO BE ASTM A992
2. CHANNELS, PLATES AND ANGLES TO BE ASTM A36
3. HSS TO BE ASTM A500 GRADE B

FOR FAB. & ERECTION:
4/30/2020

PLAN NORTH

THE FOLLOWING NOTES ARE AN INTEGRAL OF THIS DRAWING AND OUR CONTRACT:

1) THE G.C. IS TO RETURN ONE MARKED-UP COPY TO OUR OFFICE. We require review by both the architect and engineer.
2) If Architect/Engineer marks up drawing "REVIEWED" we will construe this action to mean we are in compliance with contract documents and, in fact, these drawings are "APPROVED" or "APPROVED AS NOTED" unless specifically stated otherwise.
3) These drawings are our interpretation of what is necessary to meet your specifications. It is most important, therefore, that they are checked by the G.C./Architect/Engineer against drawings provided by other trades to ensure proper installation to those surrounding materials.
4) This drawing is for the exclusive use of Hallen Steel.
5) Work areas must be free of all obstructions prior to steel installation date. This includes ducts, pipes, electrical work, and all other obstructions which prevent direct vertical lift of steel to its final location.
6) Should roof or slab penetrations be required, the G.C. is responsible for all roof or slab procution, penetrations and subsequent fire stopping, waterproofing, flashing, etc.
7) Location of holes, clips, cuts for other trades, if required by our contract, MUST be shown and or verified by others on this drawing when submitted for approval.
8) Do not scale this drawing.
9) New steel is shown as [———————], existing steel is shown as [—— —— ——]

STEEL	PAINT	HOLES	BOLTS	ELECTRODES
SEE NOTE	HOT-DIP GALVANIZED	13/16"ø	3/4"ø A325 (U.N.O.)	E7018 (U.N.O.)

NO.	DATE	COMMENTS	NO.	DATE	ISSUED FOR
8	4/30/2020	STAIR – RELEASE FOR FABRICATION	1	4/30/2020	FOR FAB. & ERECTION
7	4/1/2020	PARTIAL RELEASE FOR FABRICATION	1	4/1/2020	FOR FAB. & ERECTION
6	3/30/2020	PARTIAL RELEASE FOR FABRICATION	1	3/31/2020	FOR FAB. & ERECTION
5	3/26/2020	PARTIAL RELEASE FOR FABRICATION	1	3/26/2020	FOR FAB. & ERECTION
4	3/24/2020	PARTIAL RELEASE FOR FABRICATION	1	3/24/2020	FOR FAB. & ERECTION
3	2/7/2020	REVISED PER DESIGN CHANGE	1	2/8/2020	APPROVAL
		FIRST ISSUE	1	11/8/2019	APPROVAL

REVISIONS — PRINT RECORD

DWG TITLE
ROOF DUNNAGE
FRAMING, STAIR, & GUARDRAILS

PROJECT NAME

ARCH'T –				DWG REF
ENG'R				DWG REF S-101.00 S-102.00
CONT'R			SUPER	
DRN BY TS/OC	CHK'D BY	JOB NO. 4550	SEARCH –	DWG NO. 1C
DATE 11/4/19	DATE			

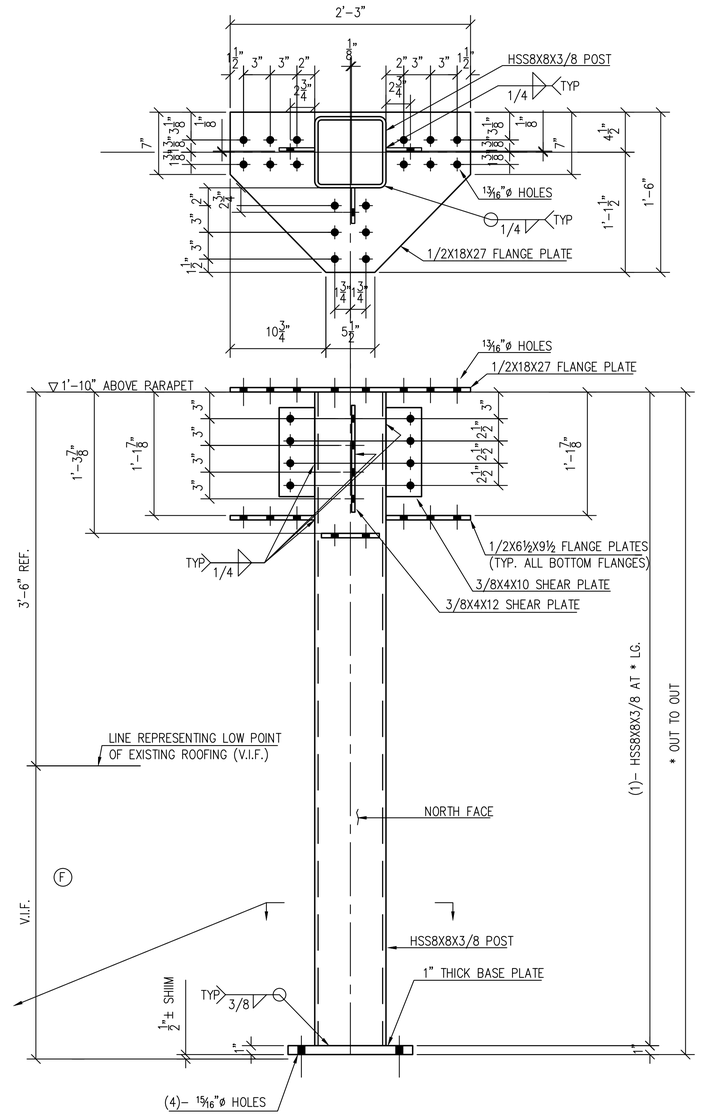

1DP4
COLUMNS 25 30
(1 REQ.)

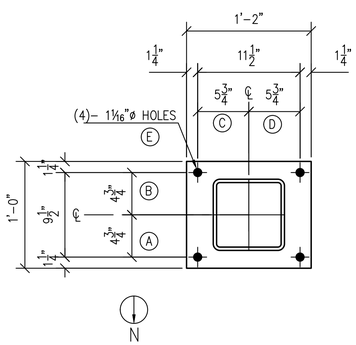

FOR FAB. & ERECTION:
4/30/2020

NOTE:
STEEL TO BE AS FOLLOWS
1. WIDE FLANGE TO BE ASTM A992
2. CHANNELS, PLATES AND ANGLES TO BE ASTM A36
3. HSS TO BE ASTM A500 GRADE B

PLAN NORTH

THE FOLLOWING NOTES ARE AN INTEGRAL OF THIS DRAWING AND OUR CONTRACT:

1) THE G.C. IS TO RETURN ONE MARKED-UP COPY TO OUR OFFICE. We require review by both the architect and engineer.
2) If Architect/Engineer marks up drawing "REVIEWED" we will construe this action to mean we are in compliance with contract documents and, in fact, these drawings are "APPROVED" or "APPROVED AS NOTED" unless specifically stated otherwise.
3) These drawings are our interpretation of what is necessary to meet your specifications. It is most important, therefore, that they are checked by the G.C./Architect/Engineer against drawings provided by other trades to ensure proper installation to those surrounding materials.
4) This drawing is for the exclusive use of Hallen Steel.
5) Work areas must be free of all obstructions prior to steel installation date. This includes ducts, pipes, electrical work, and all other obstructions which prevent direct vertical lift of steel to its final location.
6) Should roof or slab penetrations be required, the G.C. is responsible for all roof or slab provision, penetrations and subsequent fire stopping, waterproofing, flashing, etc.
7) Location of holes, clips, cuts for other trades, if required by our contract, MUST be shown and or verified by others on this drawing when submitted for approval.
8) Do not scale this drawing.
9) New steel is shown as [———————], existing steel is shown as [—— —— ——]

STEEL	PAINT	HOLES	BOLTS	ELECTRODES
SEE NOTE	HOT–DIP GALVANIZED	13/16"ø	3/4"ø A325 (U.N.O.)	E7018 (U.N.O.)

NO.	DATE	COMMENTS	NO.	DATE	ISSUED FOR
8	4/30/2020	STAIR – RELEASE FOR FABRICATION	1	4/30/2020	FOR FAB. & ERECTION
7	4/1/2020	PARTIAL RELEASE FOR FABRICATION	1	4/1/2020	FOR FAB. & ERECTION
6	3/30/2020	PARTIAL RELEASE FOR FABRICATION	1	3/31/2020	FOR FAB. & ERECTION
5	3/26/2020	PARTIAL RELEASE FOR FABRICATION	1	3/26/2020	FOR FAB. & ERECTION
4	3/24/2020	PARTIAL RELEASE FOR FABRICATION	1	3/24/2020	FOR FAB. & ERECTION
3	2/7/2020	REVISED PER DESIGN CHANGE	1	2/8/2020	APPROVAL
		FIRST ISSUE	1	11/8/2019	APPROVAL

REVISIONS — PRINT RECORD

DWG TITLE
ROOF DUNNAGE
FRAMING, STAIR, & GUARDRAILS

PROJECT NAME

ARCH'T –			DWG REF
ENG'R			DWG REF S–101.00 S–102.00
CONT'R		SUPER	
DRN BY TS/OC	CHK'D BY	JOB NO. 4550	SEARCH –	DWG NO. 1D
DATE 11/4/19	DATE			

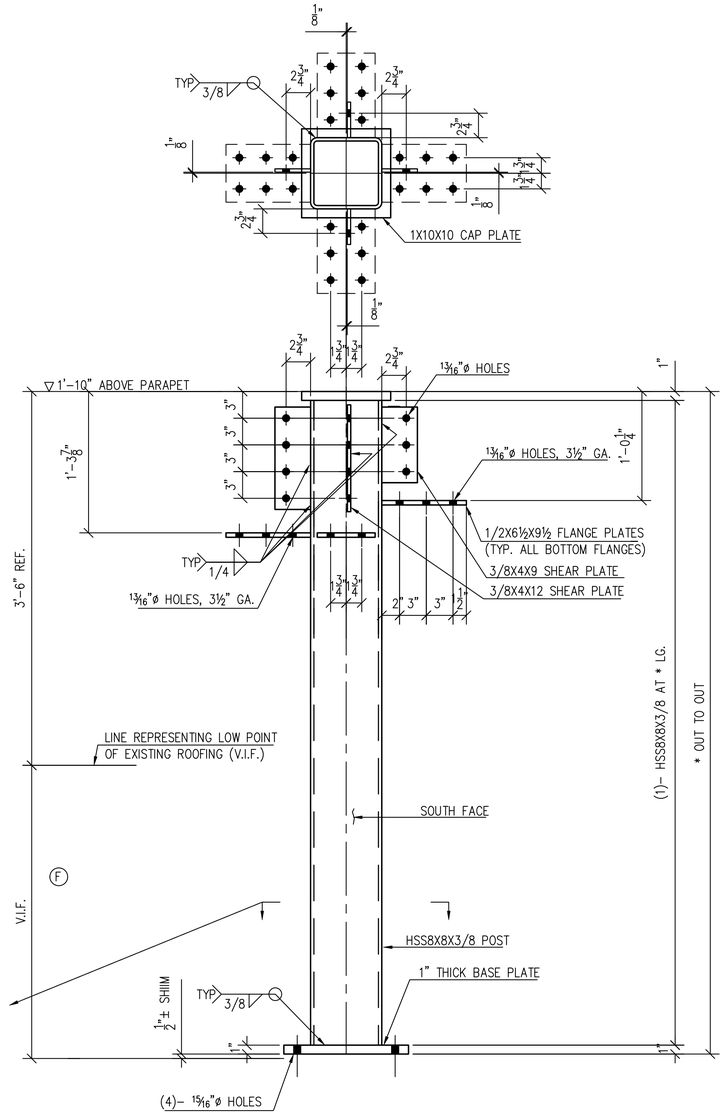

1EP5
COLUMN 24
(1 REQ.)

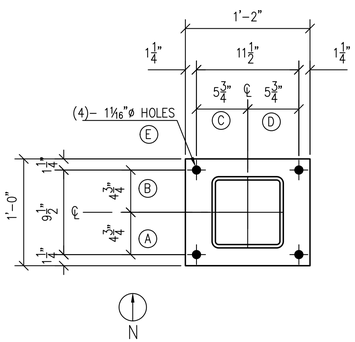

FOR FAB. & ERECTION:
4/30/2020

NOTE:
STEEL TO BE AS FOLLOWS
1. WIDE FLANGE TO BE ASTM A992
2. CHANNELS, PLATES AND ANGLES TO BE ASTM A36
3. HSS TO BE ASTM A500 GRADE B

PLAN NORTH

THE FOLLOWING NOTES ARE AN INTEGRAL OF THIS DRAWING AND OUR CONTRACT:

1) THE G.C. IS TO RETURN ONE MARKED-UP COPY TO OUR OFFICE. We require review by both the architect and engineer.
2) If Architect/Engineer marks up drawing "REVISE/ET" we will consider this action to mean: we are in compliance with contract documents and, in fact, these drawings are "APPROVED" or "APPROVED AS NOTED" unless specifically stated otherwise.
3) These drawings are our interpretation of what is necessary to meet your specifications. It is most important, therefore, that they are checked by the G.C./Architect/Engineer against drawings provided by other trades to ensure proper installation to those surrounding materials.
4) This drawing is for the exclusive use of Hidden Steel.
5) Work areas must be free of all obstructions prior to steel installation date. This includes ducts, pipes, electrical work, and all other obstructions which prevent direct vertical lift of steel to its final location.
6) Should roof or slab penetrations be required, the G.C. is responsible for all roof or slab provision, penetrations and subsequent fire stopping, waterproofing, flashing, etc.
7) Location of holes, clips, cuts for other trades, if required by our contract, MUST be shown and or verified by others on this drawing when submitted for approval.
8) Do not scale this drawing.
9) New steel is shown as [———————], existing steel is shown as [— — — —]

STEEL	PAINT	HOLES	BOLTS	ELECTRODES
SEE NOTE	HOT–DIP GALVANIZED	13/16"ø	3/4"ø A325 (U.N.O.)	E7018 (U.N.O.)

NO.	DATE	COMMENTS	NO.	DATE	ISSUED FOR
6	4/30/2020	STAIR – RELEASE FOR FABRICATION	1	4/30/2020	FOR FAB. & ERECTION
5	4/1/2020	PARTIAL RELEASE FOR FABRICATION	1	4/1/2020	FOR FAB. & ERECTION
4	3/30/2020	PARTIAL RELEASE FOR FABRICATION	1	3/31/2020	FOR FAB. & ERECTION
3	3/26/2020	PARTIAL RELEASE FOR FABRICATION	1	3/26/2020	FOR FAB. & ERECTION
2	3/24/2020	PARTIAL RELEASE FOR FABRICATION	1	3/24/2020	FOR FAB. & ERECTION
1	2/7/2020	REVISED PER DESIGN CHANGE	1	2/8/2020	APPROVAL
		FIRST ISSUE	1	11/8/2019	APPROVAL

REVISIONS — PRINT RECORD

DWG TITLE
ROOF DUNNAGE
FRAMING, STAIR, & GUARDRAILS

PROJECT NAME

ARCH'T –				DWG REF
ENG'R				DWG REF S–101.00 S–102.00
CONT'R			SUPER	
DRN BY TS/OC	CHK'D BY	JOB NO.	SEARCH	DWG NO.
DATE 11/4/19	DATE	4550	–	1E

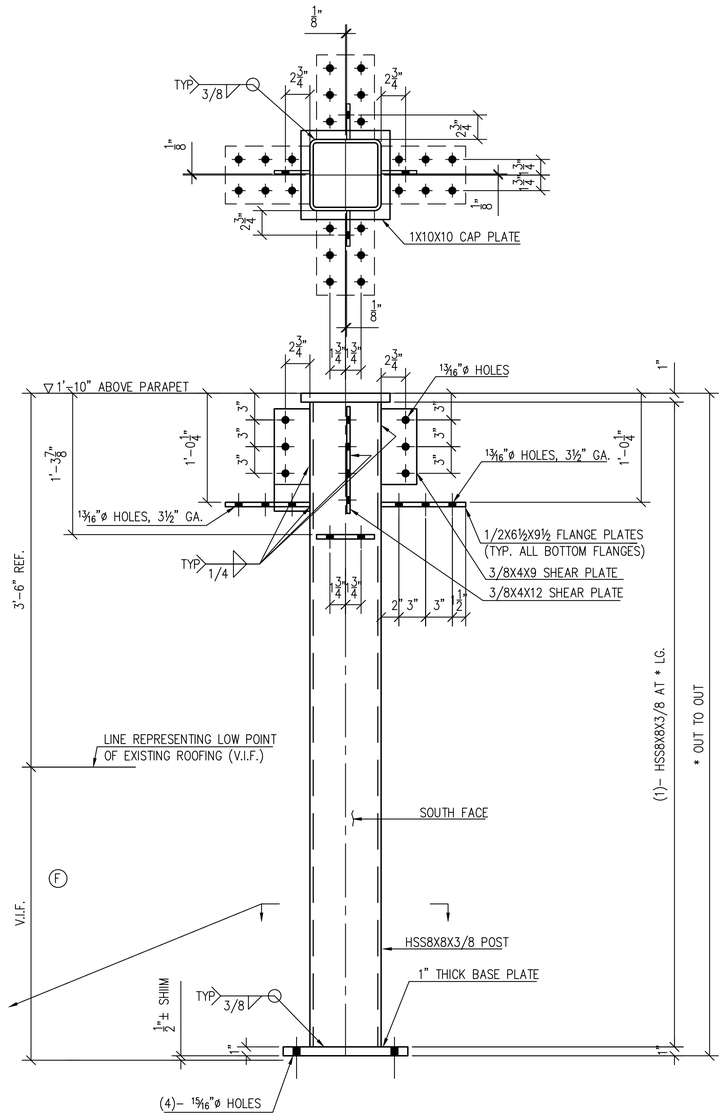

1FP6
COLUMN 29
(1 REQ.)

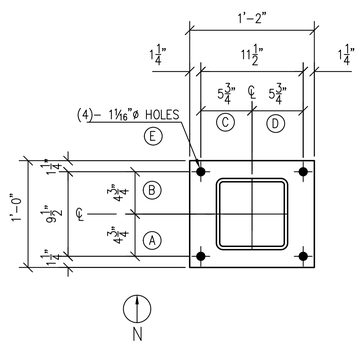

FOR FAB. & ERECTION:
4/30/2020

NOTE:
STEEL TO BE AS FOLLOWS
1. WIDE FLANGE TO BE ASTM A992
2. CHANNELS, PLATES AND ANGLES TO BE ASTM A36
3. HSS TO BE ASTM A500 GRADE B

PLAN NORTH

THE FOLLOWING NOTES ARE AN INTEGRAL OF THIS DRAWING AND OUR CONTRACT:

1) THE G.C. IS TO RETURN ONE MARKED-UP COPY TO OUR OFFICE. We require review by both the architect and engineer.
2) If Architect/Engineer marks up drawing "REVIEWED" we will construe this action to mean we are in compliance with contract documents and, in fact, these drawings are "APPROVED" or "APPROVED AS NOTED" unless specifically stated otherwise.
3) These drawings are our interpretation of what is necessary to meet your specifications. It is most important, therefore, that they are checked by the G.C./Architect/Engineer against drawings provided by other trades to ensure proper installation to those surrounding materials.
4) This drawing is for the exclusive use of Hallen Steel.
5) Work areas must be free of all obstructions prior to steel installation date. This includes ducts, pipes, electrical work, and all other obstructions which prevent direct vertical lift of steel to its final location.
6) Should roof or slab penetrations be required, the G.C. is responsible for all roof or slab procution, penetrations and subsequent fire stopping, waterproofing, flashing, etc.
7) Location of holes, clips, cuts for other trades, if required by our contract, MUST be shown and or verified by others on this drawing when submitted for approval.
8) Do not scale this drawing.
9) New steel is shown as [———————]; existing steel is shown as [—— —— ——]

STEEL	PAINT	HOLES	BOLTS	ELECTRODES
SEE NOTE	HOT–DIP GALVANIZED	13/16"ø	3/4"ø A325 (U.N.O.)	E7018 (U.N.O.)

NO.	DATE	COMMENTS	NO.	DATE	ISSUED FOR
8	4/30/2020	STAIR – RELEASE FOR FABRICATION	1	4/30/2020	FOR FAB. & ERECTION
7	4/1/2020	PARTIAL RELEASE FOR FABRICATION	1	4/1/2020	FOR FAB. & ERECTION
6	3/30/2020	PARTIAL RELEASE FOR FABRICATION	1	3/31/2020	FOR FAB. & ERECTION
5	3/26/2020	PARTIAL RELEASE FOR FABRICATION	1	3/26/2020	FOR FAB. & ERECTION
4	3/24/2020	PARTIAL RELEASE FOR FABRICATION	1	3/24/2020	FOR FAB. & ERECTION
3	2/7/2020	REVISED PER DESIGN CHANGE	1	2/8/2020	APPROVAL
		FIRST ISSUE	1	11/8/2019	APPROVAL

REVISIONS — PRINT RECORD

DWG TITLE
ROOF DUNNAGE
FRAMING, STAIR, & GUARDRAILS

PROJECT NAME

ARCH'T –	DWG REF
ENG'R	DWG REF S–101.00 S–102.00
CONT'R	SUPER

DRN BY	CHK'D BY	JOB NO.	SEARCH	DWG NO.
TS/OC		4550	–	1F
DATE 11/4/19	DATE			

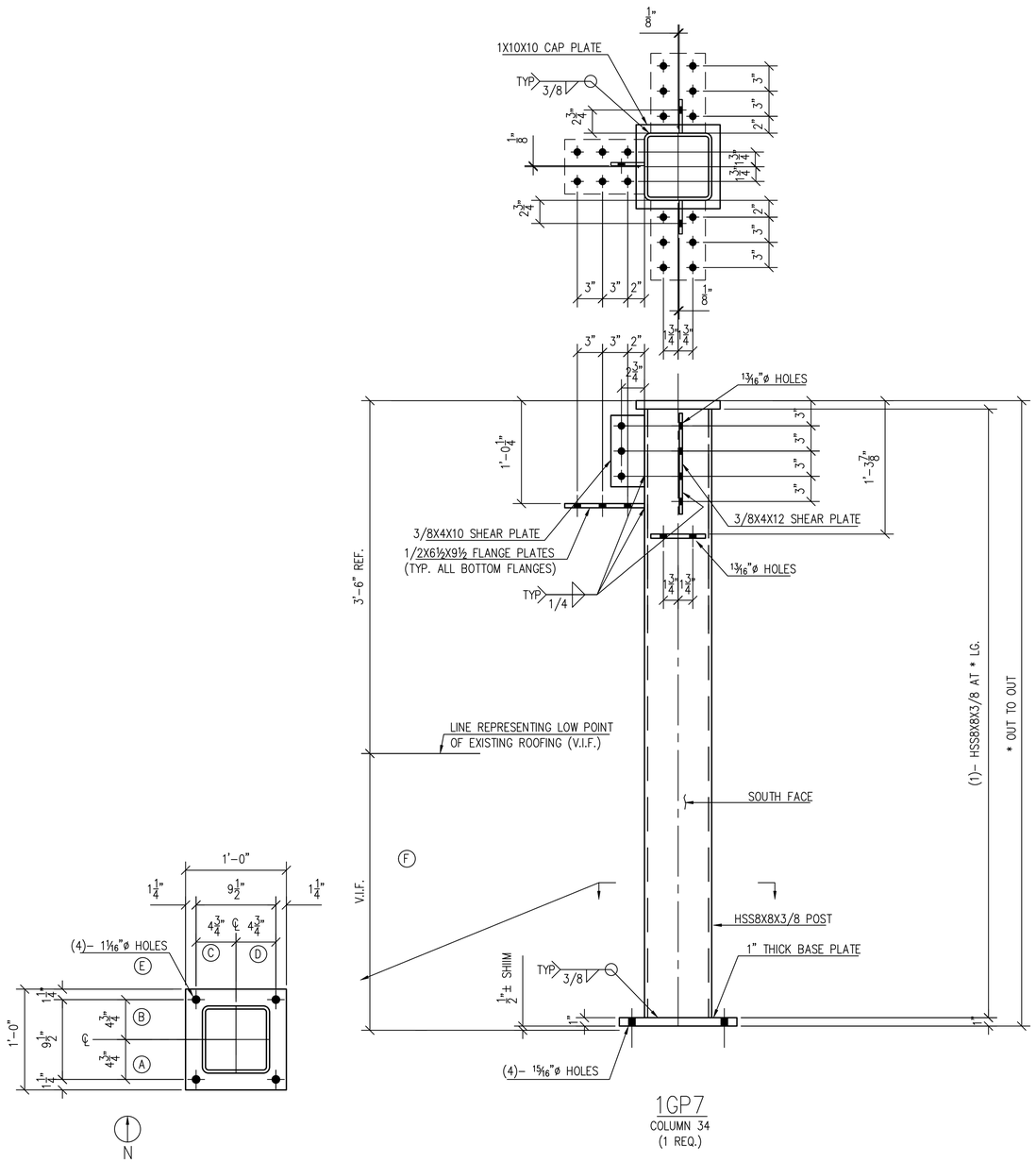

1GP7
COLUMN 34
(1 REQ.)

FOR FAB. & ERECTION:
4/30/2020

NOTE:
STEEL TO BE AS FOLLOWS
1. WIDE FLANGE TO BE ASTM A992
2. CHANNELS, PLATES AND ANGLES TO BE ASTM A36
3. HSS TO BE ASTM A500 GRADE B

PLAN NORTH

THE FOLLOWING NOTES ARE AN INTEGRAL OF THIS DRAWING AND OUR CONTRACT:

1) THE G.C. IS TO RETURN ONE MARKED-UP COPY TO OUR OFFICE. We require review by both the architect and engineer.
2) If Architect/Engineer marks up drawing "REVIEWED" we will construe this action to mean : we are in compliance with contract documents and, in fact, these drawings are "APPROVED" or "APPROVED AS NOTED" unless specifically stated otherwise.
3) These drawings are our interpretation of what is necessary to meet your specifications. It is most important, therefore, that they are checked by the G.C./Architect/Engineer against drawings provided by other trades to ensure proper installation to those surrounding materials.
4) This drawing is for the exclusive use of Hallen Steel.
5) Work areas must be free of all obstructions prior to steel installation date. This includes ducts, pipes, electrical work, and all other obstructions which prevent direct vertical lift of steel to its final location.
6) Should roof or slab penetrations be required, the G.C. is responsible for all roof or slab procedure, penetrations and subsequent fire stopping, waterproofing, flashing, etc.
7) Location of holes, clips, cuts for other trades, if required by our contract, MUST be shown and or verified by others on this drawing when submitted for approval.
8) Do not scale this drawing.
9) New steel is shown as [———], existing steel is shown as [— — — —]

STEEL	PAINT	HOLES	BOLTS	ELECTRODES
SEE NOTE	HOT-DIP GALVANIZED	13/16"ø	3/4"ø A325 (U.N.O.)	E7018 (U.N.O.)

NO.	DATE	COMMENTS	NO.	DATE	ISSUED FOR
3	4/30/2020	STAIR – RELEASE FOR FABRICATION	1	4/30/2020	FOR FAB. & ERECTION
2	4/1/2020	PARTIAL RELEASE FOR FABRICATION	1	4/1/2020	FOR FAB. & ERECTION
1	3/30/2020	PARTIAL RELEASE FOR FABRICATION	1	3/31/2020	FOR FAB. & ERECTION
1	3/26/2020	PARTIAL RELEASE FOR FABRICATION	1	3/26/2020	FOR FAB. & ERECTION
1	3/24/2020	PARTIAL RELEASE FOR FABRICATION	1	3/24/2020	FOR FAB. & ERECTION
1	2/7/2020	REVISED PER DESIGN CHANGE	1	2/8/2020	APPROVAL
		FIRST ISSUE	1	11/8/2019	APPROVAL

REVISIONS — PRINT RECORD

DWG TITLE
ROOF DUNNAGE
FRAMING, STAIR, & GUARDRAILS

PROJECT NAME

ARCH'T –
DWG REF
ENG'R
DWG REF S-101.00 S-102.00
CONT'R
SUPER

DRN. BY	CHK'D BY	JOB NO.	SEARCH	DWG NO.
TS/OC		4550	–	1G
DATE 11/4/19	DATE			

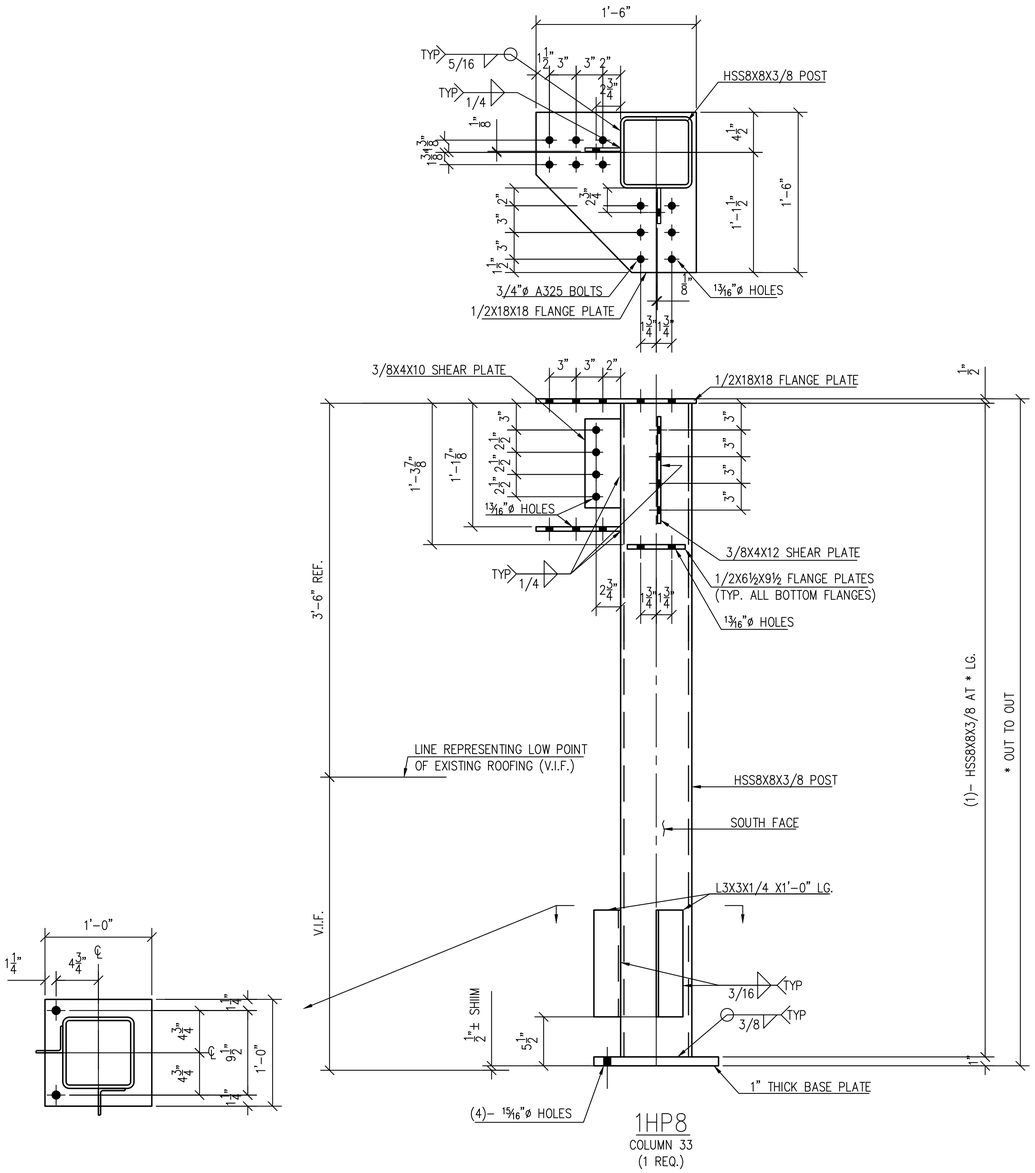

1HP8
COLUMN 33
(1 REQ.)

FOR FAB. & ERECTION:
4/30/2020

NOTE:
STEEL TO BE AS FOLLOWS
1. WIDE FLANGE TO BE ASTM A992
2. CHANNELS, PLATES AND ANGLES TO BE ASTM A36
3. HSS TO BE ASTM A500 GRADE B

PLAN NORTH

THE FOLLOWING NOTES ARE AN INTEGRAL OF THIS DRAWING AND OUR CONTRACT:

1) THE G.C. IS TO RETURN ONE MARKED-UP COPY TO OUR OFFICE. We require review by both the architect and engineer.
2) If Architect/Engineer marks up drawing "REVISED" we will construe this action to mean we are in compliance with contract documents and, in fact, these drawings are "APPROVED" or "APPROVED AS NOTED" unless specifically stated otherwise.
3) These drawings are our interpretation of what is necessary to meet your specifications. It is most important, therefore, that they are checked by the G.C./Architect/Engineer against drawings provided by other trades to ensure proper installation to those surrounding materials.
4) This drawing is for the exclusive use of Hidden Steel.
5) Work areas must be free of all obstructions prior to steel installation date. This includes ducts, pipes, electrical work, and all other obstructions which prevent direct vertical lift of steel to its final location.
6) Should roof or slab penetrations be required, the G.C. is responsible for all roof or slab provision, penetrations and subsequent fire stopping, waterproofing, flashing, etc.
7) Location of holes, clips, cuts for other trades, if required by our contract, MUST be shown and or verified by others on this drawing when submitted for approval.
8) Do not scale this drawing.
9) New steel is shown as [———————]; existing steel is shown as [—— —— ——]

STEEL	PAINT	HOLES	BOLTS	ELECTRODES
SEE NOTE	HOT-DIP GALVANIZED	13/16"ø	3/4"ø A325 (U.N.O.)	E7018 (U.N.O.)

NO.	DATE	COMMENTS	NO.	DATE	ISSUED FOR
6	4/30/2020	STAIR – RELEASE FOR FABRICATION	1	4/30/2020	FOR FAB. & ERECTION
5	4/1/2020	PARTIAL RELEASE FOR FABRICATION	1	4/1/2020	FOR FAB. & ERECTION
4	3/31/2020	PARTIAL RELEASE FOR FABRICATION	1	3/31/2020	FOR FAB. & ERECTION
3	3/26/2020	PARTIAL RELEASE FOR FABRICATION	1	3/26/2020	FOR FAB. & ERECTION
2	3/24/2020	PARTIAL RELEASE FOR FABRICATION	1	3/24/2020	FOR FAB. & ERECTION
1	2/7/2020	REVISED PER DESIGN CHANGE	1	2/8/2020	APPROVAL
		FIRST ISSUE	1	11/8/2019	APPROVAL

REVISIONS — PRINT RECORD

DWG TITLE
ROOF DUNNAGE
FRAMING, STAIR, & GUARDRAILS

PROJECT NAME

ARCH'T –				DWG REF
ENG'R				DWG REF S-101.00 S-102.00
CONT'R			SUPER	
DRN BY TS/OC	CHK'D BY	JOB NO. 4550	SEARCH –	DWG NO. 1H
DATE 11/4/19	DATE			

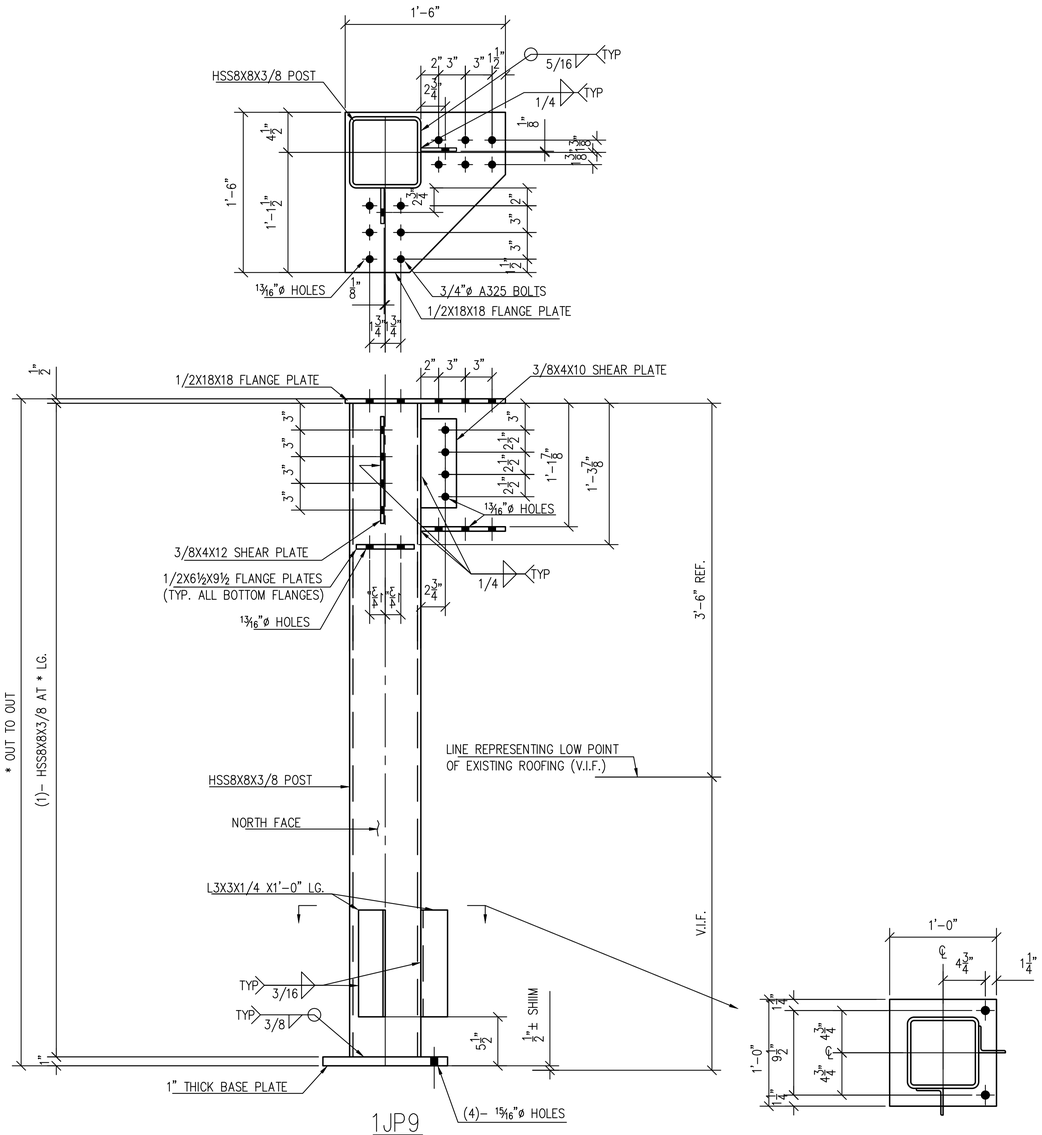

1JP9
COLUMN 35
(1 REQ.)

FOR FAB. & ERECTION:
4/30/2020

NOTE:
STEEL TO BE AS FOLLOWS
1. WIDE FLANGE TO BE ASTM A992
2. CHANNELS, PLATES AND ANGLES TO BE ASTM A36
3. HSS TO BE ASTM A500 GRADE B

PLAN NORTH

THE FOLLOWING NOTES ARE AN INTEGRAL OF THIS DRAWING AND OUR CONTRACT:

1) THE G.C. IS TO RETURN ONE MARKED-UP COPY TO OUR OFFICE. We require review by both the architect and engineer.
2) If Architect/Engineer marks up drawing "REVISED" we will construe this action to mean we are in compliance with contract documents and, in fact, these drawings are "APPROVED" or "APPROVED AS NOTED" unless specifically stated otherwise.
3) These drawings are our interpretation of what is necessary to meet your specifications. It is most important, therefore, that they are checked by the G.C./Architect/Engineer against drawings provided by other trades to ensure proper installation to those surrounding materials.
4) This drawing is for the exclusive use of Hallen Steel.
5) Work areas must be free of all obstructions prior to steel installation date. This includes ducts, pipes, electrical work, and all other obstructions which prevent direct vertical lift of steel to its final location.
6) Should roof or slab penetrations be required, the G.C. is responsible for all roof or slab provision, penetrations and subsequent fire stopping, waterproofing, flashing, etc.
7) Location of holes, clips, cuts for other trades, if required by our contract, MUST be shown and or verified by others on this drawing when submitted for approval.
8) Do not scale this drawing.
9) New steel is shown as [———], existing steel is shown as [—— —— ——]

STEEL	PAINT	HOLES	BOLTS	ELECTRODES
SEE NOTE	HOT-DIP GALVANIZED	13/16"ø	3/4"ø A325 (U.N.O.)	E7018 (U.N.O.)

NO.	DATE	COMMENTS	NO.	DATE	ISSUED FOR
8	4/30/2020	STAIR – RELEASE FOR FABRICATION	1	4/30/2020	FOR FAB. & ERECTION
7	4/1/2020	PARTIAL RELEASE FOR FABRICATION	1	4/1/2020	FOR FAB. & ERECTION
6	3/30/2020	PARTIAL RELEASE FOR FABRICATION	1	3/31/2020	FOR FAB. & ERECTION
5	3/26/2020	PARTIAL RELEASE FOR FABRICATION	1	3/26/2020	FOR FAB. & ERECTION
4	3/24/2020	PARTIAL RELEASE FOR FABRICATION	1	3/24/2020	FOR FAB. & ERECTION
3	2/7/2020	REVISED PER DESIGN CHANGE	1	2/8/2020	APPROVAL
		FIRST ISSUE	1	11/8/2019	APPROVAL

REVISIONS — PRINT RECORD

DWG TITLE
ROOF DUNNAGE
FRAMING, STAIR, & GUARDRAILS

PROJECT NAME

ARCH'T –				DWG REF
ENG'R				DWG REF S-101.00 S-102.00
CONT'R			SUPER	
DRN BY TS/OC	CHK'D BY	JOB NO. 4550	SEARCH –	DWG NO. 1J
DATE 11/4/19	DATE			

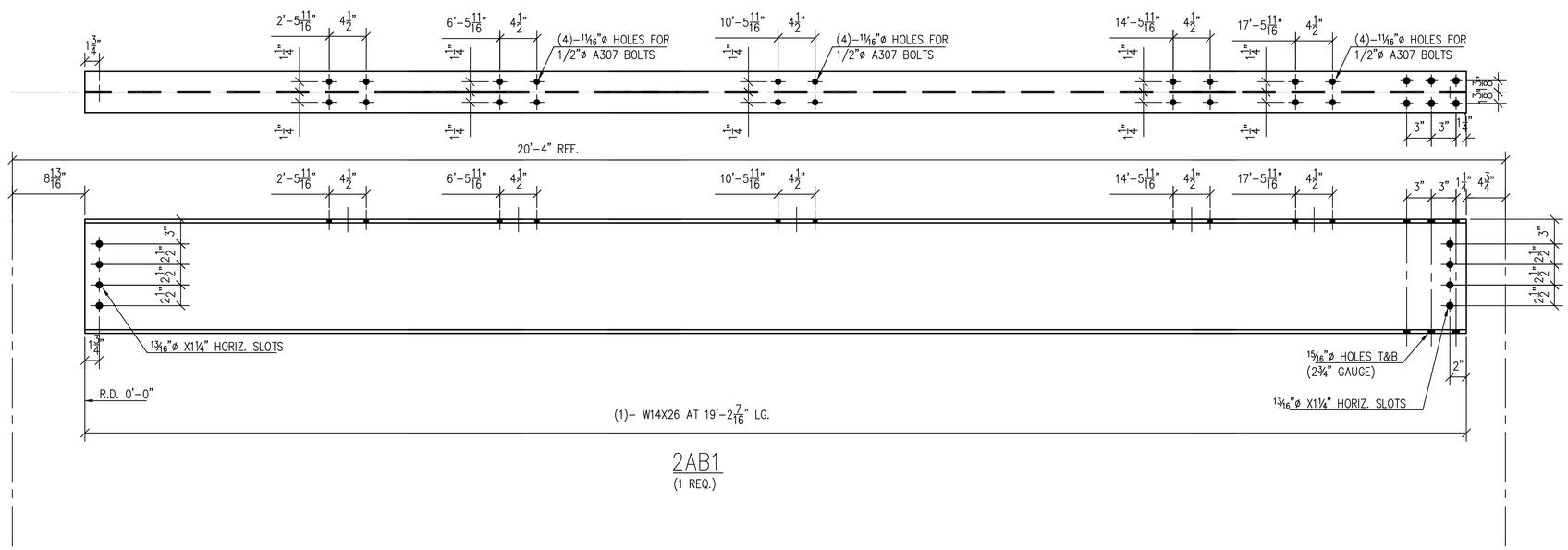

2AB1
(1 REQ.)

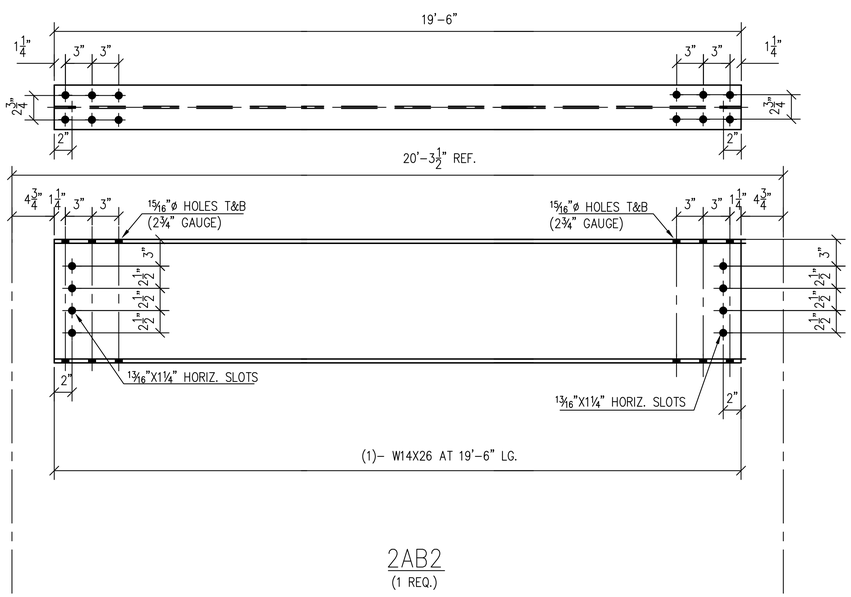

2AB2
(1 REQ.)

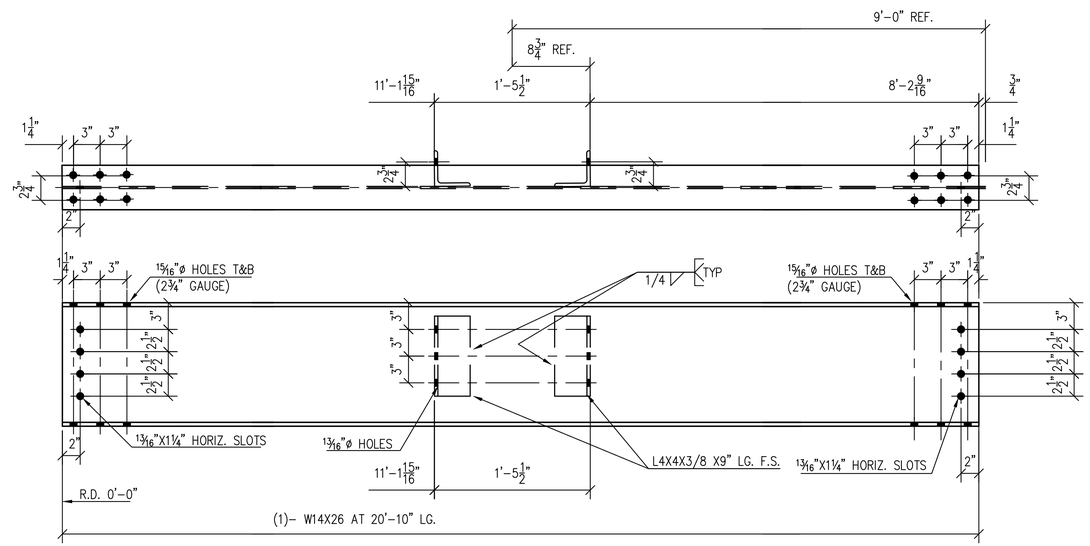

2AB3
(1 REQ.)

BILL OF MATERIALS

REQ.	PC. MARK	SHAPE	LENGTH		REMARKS
1	2AB1	W14X26	19'	2 7/16"	–
1	2AB2	W14X26	19'	6"	–
1	2AB3	W14X26	20'	10"	–
2	aa3	L4X4X3/8	0'	9"	–

FOR FAB. & ERECTION:
4/30/2020

NOTE:
STEEL TO BE AS FOLLOWS
1. WIDE FLANGE TO BE ASTM A992
2. CHANNELS, PLATES AND ANGLES TO BE ASTM A36
3. HSS TO BE ASTM A500 GRADE B

PLAN NORTH

THE FOLLOWING NOTES ARE AN INTEGRAL OF THIS DRAWING AND OUR CONTRACT:

1) THE G.C. IS TO RETURN ONE MARKED-UP COPY TO OUR OFFICE. We require review by both the architect and engineer.
2) If Architect/Engineer marks up drawing "REVISE/ED" we will construe this action to mean we are in compliance with contract documents and, in fact, these drawings are "APPROVED" or "APPROVED AS NOTED" unless specifically stated otherwise.
3) These drawings are our interpretation of what is necessary to meet your specifications. It is most important, therefore, that they are checked by the G.C./Architect/Engineer against drawings provided by other trades to ensure proper installation to those surrounding materials.
4) This drawing is for the exclusive use of Hallen Steel.
5) Work areas must be free of all obstructions prior to steel installation date. This includes ducts, pipes, electrical work, and all other obstructions which prevent direct vertical lift of steel to its final location.
6) Should roof or slab penetrations be required, the G.C. is responsible for all roof or slab procution, penetrations and subsequent fire stopping, waterproofing, flashing, etc.
7) Location of holes, clips, cuts for other trades, if required by our contract, MUST be shown and or verified by others on this drawing when submitted for approval.
8) Do not scale this drawing.
9) New steel is shown as [————————], existing steel is shown as [— — — —]

STEEL	PAINT	HOLES	BOLTS	ELECTRODES
SEE NOTE	HOT-DIP GALVANIZED	13/16"ø	3/4"ø A325 (U.N.O.)	E7018 (U.N.O.)

NO.	DATE	COMMENTS	NO.	DATE	ISSUED FOR
6	4/30/2020	STAIR – RELEASE FOR FABRICATION	1	4/30/2020	FOR FAB. & ERECTION
5	4/1/2020	PARTIAL RELEASE FOR FABRICATION	1	4/1/2020	FOR FAB. & ERECTION
4	3/30/2020	PARTIAL RELEASE FOR FABRICATION	1	3/31/2020	FOR FAB. & ERECTION
3	3/26/2020	PARTIAL RELEASE FOR FABRICATION	1	3/26/2020	FOR FAB. & ERECTION
2	3/24/2020	PARTIAL RELEASE FOR FABRICATION	1	3/24/2020	FOR FAB. & ERECTION
1	2/7/2020	REVISED PER DESIGN CHANGE	1	2/8/2020	APPROVAL
		FIRST ISSUE	1	11/8/2019	APPROVAL

REVISIONS — PRINT RECORD

DWG TITLE
ROOF DUNNAGE
FRAMING, STAIR, & GUARDRAILS

PROJECT NAME

ARCH'T –				DWG REF
ENG'R				DWG REF S-101.00 S-102.00
CONT'R			SUPER	
DRN BY TS/OC	CHK'D BY	JOB NO. 4550	SEARCH –	DWG NO. 2A
DATE 11/4/19	DATE			

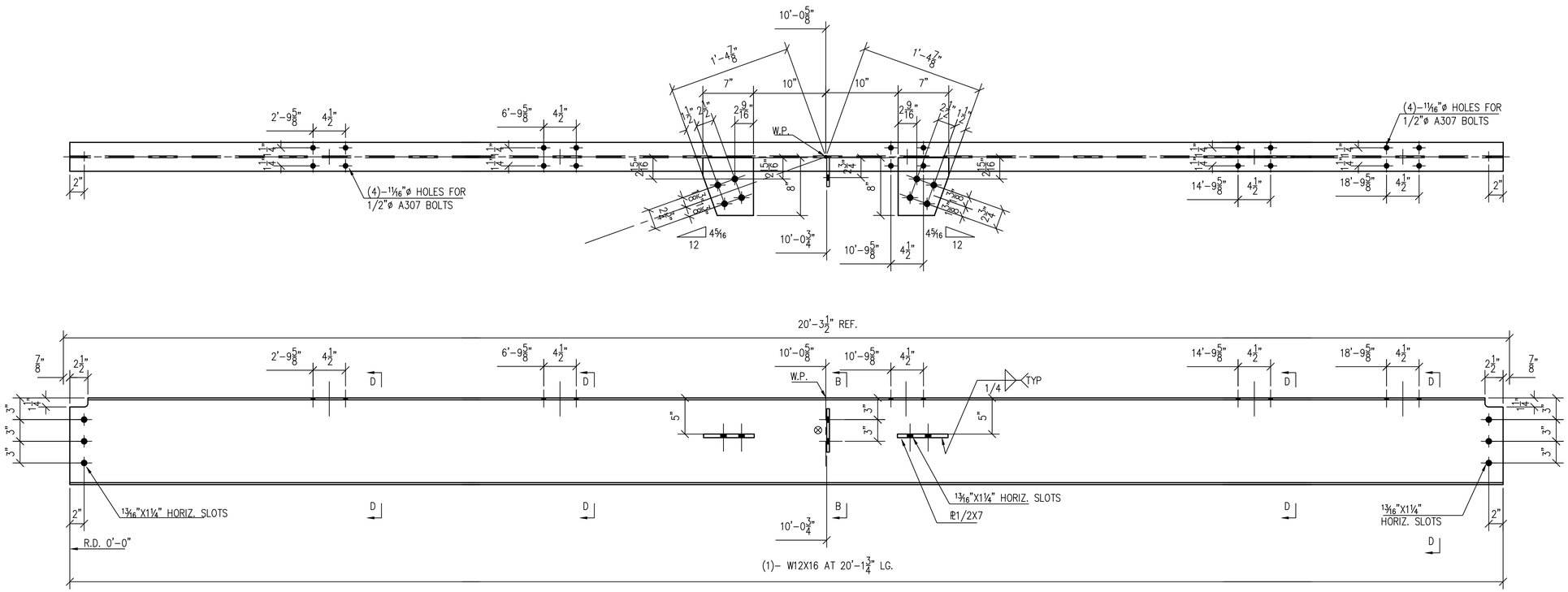

2BB5
(1 REQ.)

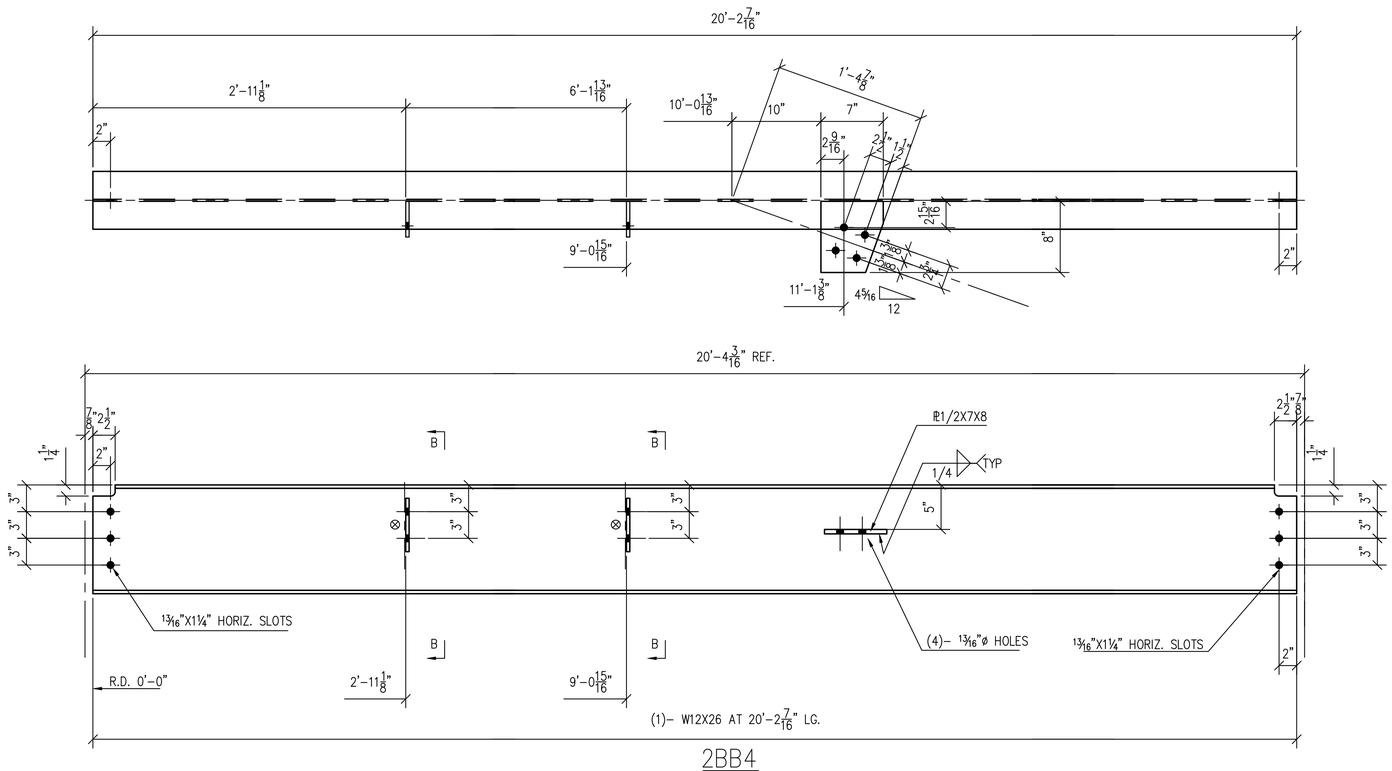

2BB4
(1 REQ.)

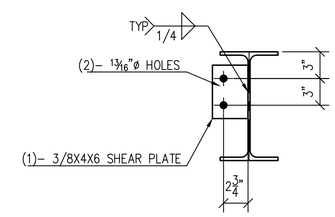

SECTION B–B

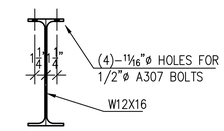

SECTION D–D

BILL OF MATERIALS

REQ.	PC. MARK	SHAPE	LENGTH		REMARKS
1	2BB4	W12X16	20'	2 7/16"	–
1	pb11	PL1/2X7	0'	8"	–
2	pc11	PL3/8X4	0'	6"	–
1	2BB5	W12X16	20'	1 3/4"	–
1	pa11	PL1/2X7	0'	8"	–
1	pb11	PL1/2X7	0'	8"	–
1	pc11	PL3/8X4	0'	6"	–

PLAN NORTH

THE FOLLOWING NOTES ARE AN INTEGRAL OF THIS DRAWING AND OUR CONTRACT:

1) THE G.C. IS TO RETURN ONE MARKED–UP COPY TO OUR OFFICE. We require review by both the architect and engineer.
2) If Architect/Engineer marks up drawing "REVISE/EC" we will construe this action to mean we are in compliance with contract documents and, in fact, these drawings are "APPROVED" or "APPROVED AS NOTED" unless specifically stated otherwise.
3) These drawings are our interpretation of what is necessary to meet your specifications. It is most important, therefore, that they are checked by the G.C./Architect/Engineer against drawings provided by other trades to ensure proper installation to those surrounding materials.
4) This drawing is for the exclusive use of Hallen Steel.
5) Work areas must be free of all obstructions prior to steel installation date. This includes ducts, pipes, electrical work, and all other obstructions which prevent direct vertical lift of steel to its final location.
6) Should roof or slab penetrations be required, the G.C. is responsible for all roof or slab provision, penetrations and subsequent fire stopping, waterproofing, flashing, etc.
7) Location of holes, clips, cuts for other trades, if required by our contract, MUST be shown and or verified by others on this drawing when submitted for approval.
8) Do not scale this drawing.
9) New steel is shown as [————————], existing steel is shown as [—— —— ——]

STEEL	PAINT	HOLES	BOLTS	ELECTRODES
SEE NOTE	HOT–DIP GALVANIZED	13/16"ø	3/4"ø A325 (U.N.O.)	E7018 (U.N.O.)

NO.	DATE	COMMENTS	NO.	DATE	ISSUED FOR
6	4/30/2020	STAIR – RELEASE FOR FABRICATION	1	4/30/2020	FOR FAB. & ERECTION
5	4/1/2020	PARTIAL RELEASE FOR FABRICATION	1	4/1/2020	FOR FAB. & ERECTION
4	3/30/2020	PARTIAL RELEASE FOR FABRICATION	1	3/31/2020	FOR FAB. & ERECTION
3	3/26/2020	PARTIAL RELEASE FOR FABRICATION	1	3/26/2020	FOR FAB. & ERECTION
2	3/24/2020	PARTIAL RELEASE FOR FABRICATION	1	3/24/2020	FOR FAB. & ERECTION
1	2/7/2020	REVISED PER DESIGN CHANGE	1	2/8/2020	APPROVAL
		FIRST ISSUE	1	11/8/2019	APPROVAL

REVISIONS — PRINT RECORD

FOR FAB. & ERECTION:
4/30/2020

DWG TITLE
ROOF DUNNAGE
FRAMING, STAIR, & GUARDRAILS

PROJECT NAME

ARCH'T –
ENG'R
CONT'R
SUPER
DWG REF
DWG REF S–101.00 S–102.00

DRN BY	CHK'D BY	JOB NO.	SEARCH	DWG NO.
TS/OC		4550	–	2B
DATE 11/4/19	DATE			

NOTE:
STEEL TO BE AS FOLLOWS
1. WIDE FLANGE TO BE ASTM A992
2. CHANNELS, PLATES AND ANGLES TO BE ASTM A36
3. HSS TO BE ASTM A500 GRADE B

BILL OF MATERIALS					
REQ.	PC. MARK	SHAPE	LENGTH		REMARKS
1	2CB6	W12X16	21'	5¾	–
1	pa12	PL1/2X7	0'	8"	–
1	pb12	PL1/2X7	0'	8"	–
1	pc11	PL3/8X4	0'	6"	–

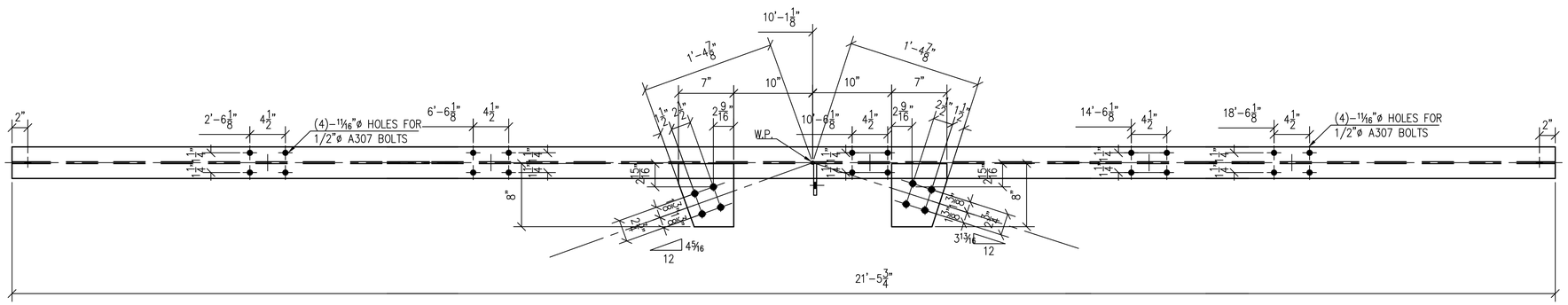

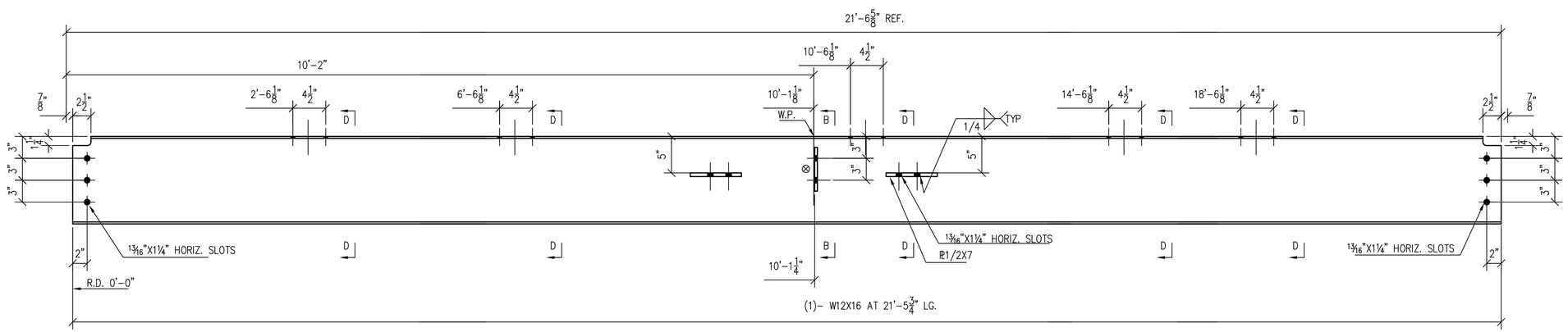

2CB6
(1 REQ.)

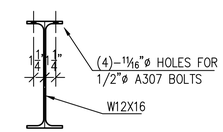

SECTION D-D

FOR FAB. & ERECTION:
4/30/2020

NOTE:
STEEL TO BE AS FOLLOWS
1. WIDE FLANGE TO BE ASTM A992
2. CHANNELS, PLATES AND ANGLES TO BE ASTM A36
3. HSS TO BE ASTM A500 GRADE B

PLAN NORTH

THE FOLLOWING NOTES ARE AN INTEGRAL OF THIS DRAWING AND OUR CONTRACT:

1) THE G.C. IS TO RETURN ONE MARKED-UP COPY TO OUR OFFICE. We require review by both the architect and engineer.
2) If Architect/Engineer marks up drawing "AS-NOTED" we will construe this action to mean we are in compliance with contract documents and, in fact, these drawings are "APPROVED" or "APPROVED AS NOTED" unless specifically stated otherwise.
3) These drawings are our interpretation of what is necessary to meet your specifications. It is most important, therefore, that they are checked by the G.C./Architect/Engineer against drawings provided by other trades to ensure proper installation to those surrounding materials.
4) This drawing is for the exclusive use of Hallen Steel.
5) Work areas must be free of all obstructions prior to steel installation date. This includes ducts, pipes, electrical work, and all other obstructions which prevent direct vertical lift of steel to its final location.
6) Should roof or slab penetrations be required, the G.C. is responsible for all roof or slab protection, penetrations and subsequent fire stopping, waterproofing, flashing, etc.
7) Location of holes, clips, cuts for other trades, if required by our contract, MUST be shown and or verified by others on this drawing when submitted for approval.
8) Do not scale this drawing.
9) New steel is shown as [————————], existing steel is shown as [—— —— ——]

STEEL	PAINT	HOLES	BOLTS	ELECTRODES
SEE NOTE	HOT-DIP GALVANIZED	13/16"ø	3/4"ø A325 (U.N.O.)	E7018 (U.N.O.)

NO.	DATE	COMMENTS	NO.	DATE	ISSUED FOR
6	4/30/2020	STAIR – RELEASE FOR FABRICATION	1	4/30/2020	FOR FAB. & ERECTION
5	4/1/2020	PARTIAL RELEASE FOR FABRICATION	1	4/1/2020	FOR FAB. & ERECTION
4	3/30/2020	PARTIAL RELEASE FOR FABRICATION	1	3/31/2020	FOR FAB. & ERECTION
3	3/26/2020	PARTIAL RELEASE FOR FABRICATION	1	3/26/2020	FOR FAB. & ERECTION
2	3/24/2020	PARTIAL RELEASE FOR FABRICATION	1	3/24/2020	FOR FAB. & ERECTION
1	2/7/2020	REVISED PER DESIGN CHANGE	1	2/8/2020	APPROVAL
		FIRST ISSUE	1	11/8/2019	APPROVAL

REVISIONS — PRINT RECORD

DWG TITLE
ROOF DUNNAGE
FRAMING, STAIR, & GUARDRAILS

PROJECT NAME

ARCH'T –
DWG REF
ENG'R
DWG REF S-101.00 S-102.00
CONT'R
SUPER

DRN BY	CHK'D BY	JOB NO.	SEARCH	DWG NO.
TS/OC		4550	–	2C
DATE 11/4/19	DATE			

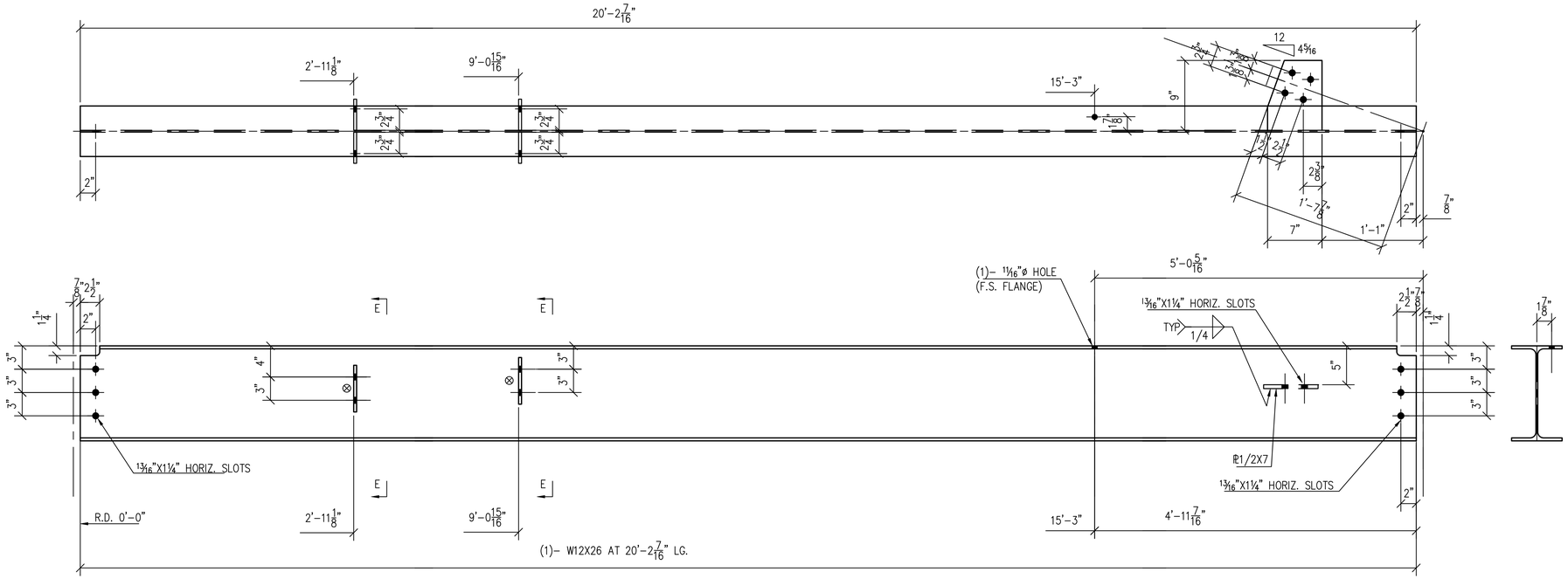

2DB7
(1 REQ.)

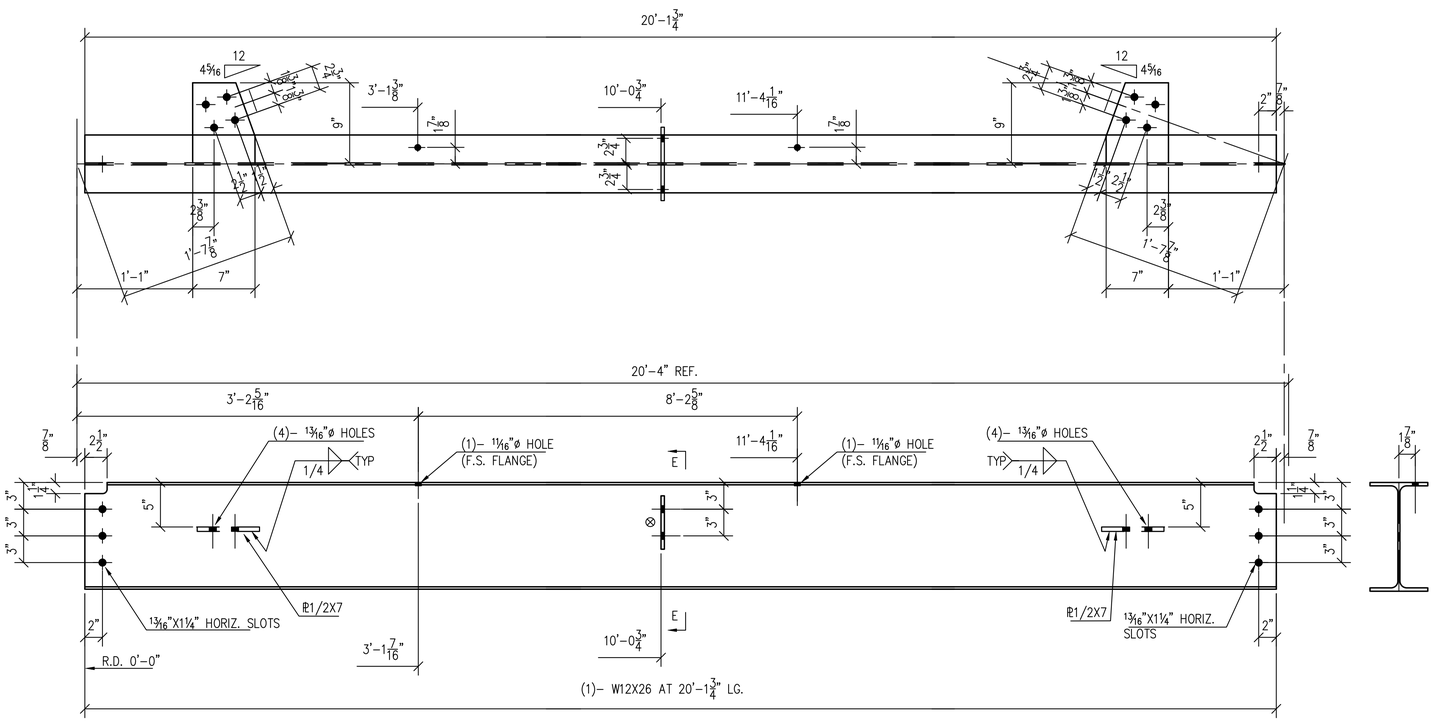

2DB8
(1 REQ.)

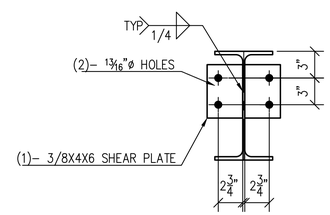

SECTION E-E

BILL OF MATERIALS					
REQ.	PC. MARK	SHAPE	LENGTH		REMARKS
1	2DB7	W12X26	20'	2 7/16"	–
1	pa13	PL1/2X7	0'	9"	–
4	pc11	PL3/8X4	0'	6"	–
1	2DB8	W12X26	20'	1 3/4"	–
1	pa13	PL1/2X7	0'	9"	–
1	pb13	PL1/2X7	0'	9"	–
2	pc11	PL3/8X4	0'	6"	–

PLAN NORTH

THE FOLLOWING NOTES ARE AN INTEGRAL OF THIS DRAWING AND OUR CONTRACT:

1) WE E.C. TO RETURN ONE MARKED-UP COPY TO OUR OFFICE. We require review by both the architect and engineer.
2) If Architect/Engineer marks up drawing "REVISED" we will construe this action to mean we are in compliance with contract documents and, in fact, these drawings are "APPROVED" or "APPROVED AS NOTED" unless specifically stated otherwise.
3) These drawings are our interpretation of what is necessary to meet your specifications. It is most important, therefore, that they are checked by the G.C./Architect/Engineer against drawings provided by other trades to ensure proper installation to those surrounding materials.
4) This drawing is for the exclusive use of Hallen Steel.
5) Work areas must be free of all obstructions prior to steel installation date. This includes ducts, pipes, electrical work, and all other obstructions which prevent direct vertical lift of steel to its final location.
6) Should roof or slab penetrations be required, the G.C. is responsible for all roof or slab provision, penetrations and subsequent fire stopping, waterproofing, flashing, etc.
7) Location of holes, clips, cuts for other trades, if required by our contract, MUST be shown and or verified by others on this drawing when submitted for approval.
8) Do not scale this drawing.
9) New steel is shown as [————————], existing steel is shown as [—— —— ——]

STEEL	PAINT	HOLES	BOLTS	ELECTRODES
SEE NOTE	HOT-DIP GALVANIZED	13/16"ø	3/4"ø A325 (U.N.O.)	E7018 (U.N.O.)

NO.	DATE	COMMENTS	NO.	DATE	ISSUED FOR
6	4/30/2020	STAIR – RELEASE FOR FABRICATION	1	4/30/2020	FOR FAB. & ERECTION
5	4/1/2020	PARTIAL RELEASE FOR FABRICATION	1	4/1/2020	FOR FAB. & ERECTION
4	3/30/2020	PARTIAL RELEASE FOR FABRICATION	1	3/31/2020	FOR FAB. & ERECTION
3	3/26/2020	PARTIAL RELEASE FOR FABRICATION	1	3/26/2020	FOR FAB. & ERECTION
2	3/24/2020	PARTIAL RELEASE FOR FABRICATION	1	3/24/2020	FOR FAB. & ERECTION
1	2/7/2020	REVISED PER DESIGN CHANGE	1	2/8/2020	APPROVAL
		FIRST ISSUE	1	11/8/2019	APPROVAL

REVISIONS — PRINT RECORD

FOR FAB. & ERECTION:
4/30/2020

DWG TITLE
ROOF DUNNAGE
FRAMING, STAIR, & GUARDRAILS

PROJECT NAME

NOTE:
STEEL TO BE AS FOLLOWS
1. WIDE FLANGE TO BE ASTM A992
2. CHANNELS, PLATES AND ANGLES TO BE ASTM A36
3. HSS TO BE ASTM A500 GRADE B

ARCH'T –				DWG REF
ENG'R				DWG REF S-101.00 S-102.00
CONT'R			SUPER	
DRN BY TS/OC	CHK'D BY	JOB NO. 4550	SEARCH –	DWG NO. 2D
DATE 11/4/19	DATE			

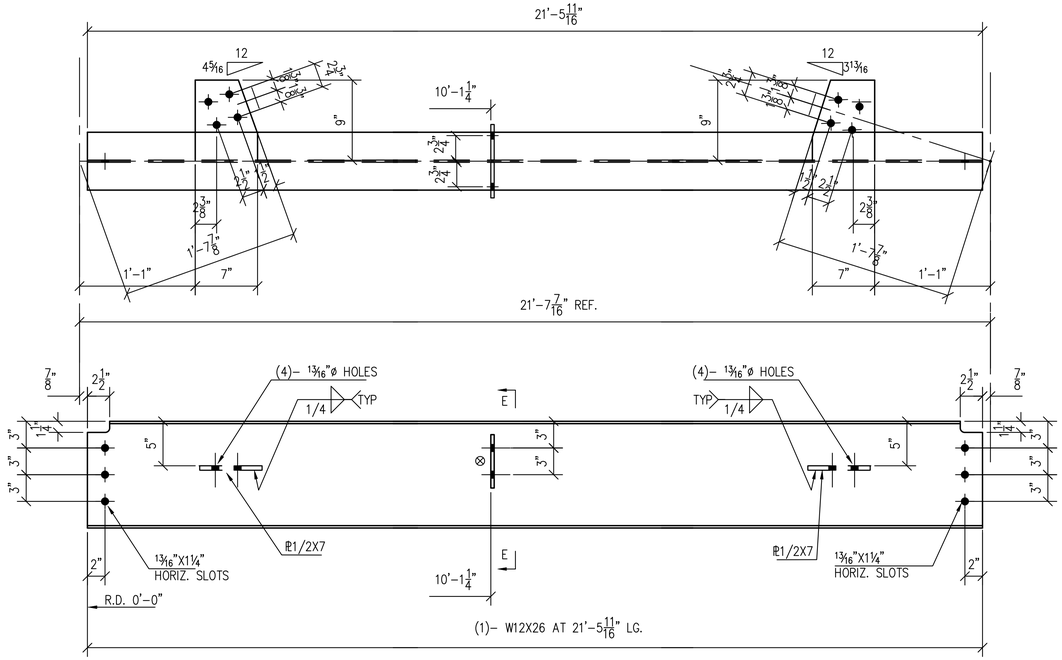

2EB9
(1 REQ.)

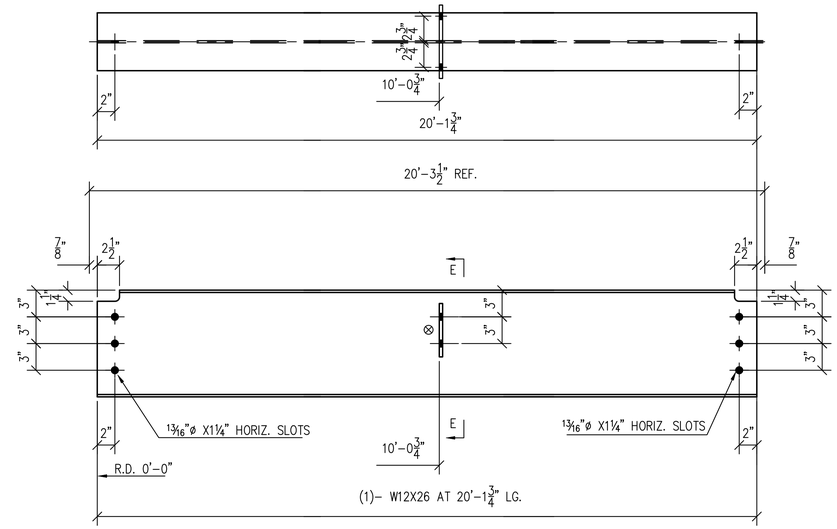

2EB11
(2 REQ.)

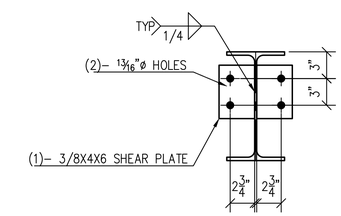

SECTION E-E

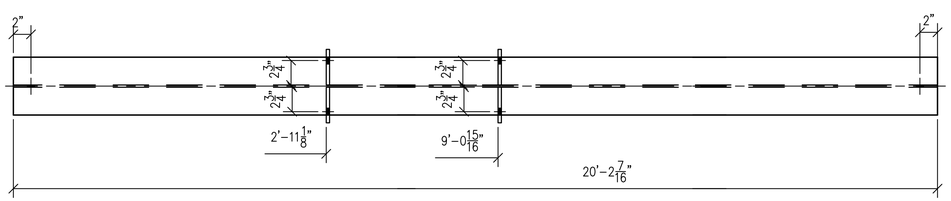

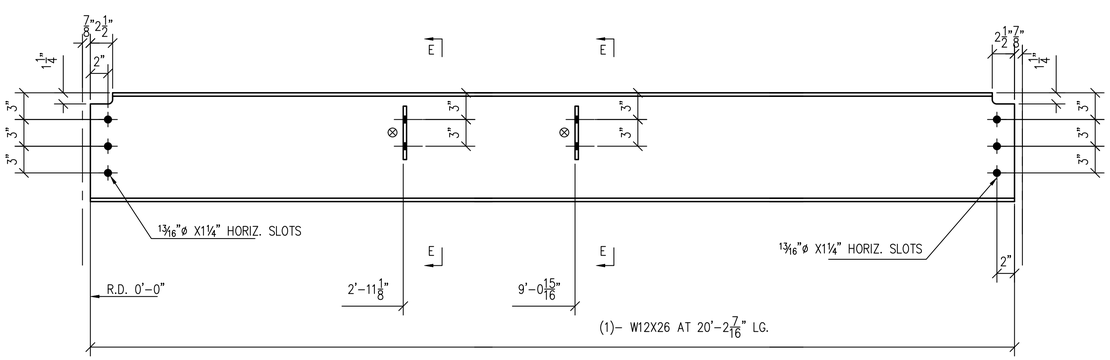

2EB10
(1 REQ.)

BILL OF MATERIALS

REQ.	PC. MARK	SHAPE	LENGTH		REMARKS
1	2EB9	W12X26	20'	5 11/16"	–
1	pa14	PL1/2X7	0'	9"	–
1	pb14	PL1/2X7	0'	9"	–
2	pc11	PL3/8X4	0'	6"	–
1	2EB10	W12X26	20'	2 7/16"	–
4	pc11	PL3/8X4	0'	6"	–
2	2EB11	W12X26	20'	1¾"	–
4	pc11	PL3/8X4	0'	6"	–

PLAN NORTH

THE FOLLOWING NOTES ARE AN INTEGRAL OF THIS DRAWING AND OUR CONTRACT:

1) WE E.C. IS TO RETURN ONE MARKED-UP COPY TO OUR OFFICE. We require review by both the architect and engineer.
2) If Architect/Engineer marks up drawing "REVIEWED" we will consider this action to mean we are in compliance with contract documents and, in fact, these drawings are "APPROVED" or "APPROVED AS NOTED" unless specifically stated otherwise.
3) These drawings are our interpretation of what is necessary to meet your specifications. It is most important, therefore, that they are checked by the E.C./Architect/Engineer against drawings provided by other trades to assure proper installation to those surrounding materials.
4) This drawing is for the exclusive use of Hallen Steel.
5) Work areas must be free of all obstructions prior to steel installation date. This includes ducts, pipes, electrical work, and all other obstructions which prevent direct vertical lift of steel to its final location.
6) Should roof or slab penetrations be required, the E.C. is responsible for all roof or slab provision, penetrations and subsequent fire stopping, waterproofing, flashing, etc.
7) Location of holes, clips, cuts for other trades, if required by our contract, MUST be shown and or verified by others on this drawing when submitted for approval.
8) Do not scale this drawing.
9) New steel is shown as [————————], existing steel is shown as [— — — —]

STEEL	PAINT	HOLES	BOLTS	ELECTRODES
SEE NOTE	HOT-DIP GALVANIZED	13/16"ø	3/4"ø A325 (U.N.O.)	E7018 (U.N.O.)

6	4/30/2020	STAIR – RELEASE FOR FABRICATION	1	4/30/2020	FOR FAB. & ERECTION
5	4/1/2020	PARTIAL RELEASE FOR FABRICATION	1	4/1/2020	FOR FAB. & ERECTION
4	3/30/2020	PARTIAL RELEASE FOR FABRICATION	1	3/31/2020	FOR FAB. & ERECTION
3	3/26/2020	PARTIAL RELEASE FOR FABRICATION	1	3/26/2020	FOR FAB. & ERECTION
2	3/24/2020	PARTIAL RELEASE FOR FABRICATION	1	3/24/2020	FOR FAB. & ERECTION
1	2/7/2020	REVISED PER DESIGN CHANGE	1	2/8/2020	APPROVAL
		FIRST ISSUE	1	11/8/2019	APPROVAL
NO.	DATE	COMMENTS	NO.	DATE	ISSUED FOR

REVISIONS — PRINT RECORD

FOR FAB. & ERECTION:
4/30/2020

DWG TITLE
ROOF DUNNAGE
FRAMING, STAIR, & GUARDRAILS

PROJECT NAME

ARCH'T –			DWG REF
ENG'R			DWG REF S-101.00 S-102.00
CONT'R		SUPER	
DRN BY TS/OC	CHK'D BY	JOB NO. 4550	SEARCH –	DWG NO. 2E
DATE 11/4/19	DATE			

NOTE:
STEEL TO BE AS FOLLOWS
1. WIDE FLANGE TO BE ASTM A992
2. CHANNELS, PLATES AND ANGLES TO BE ASTM A36
3. HSS TO BE ASTM A500 GRADE B

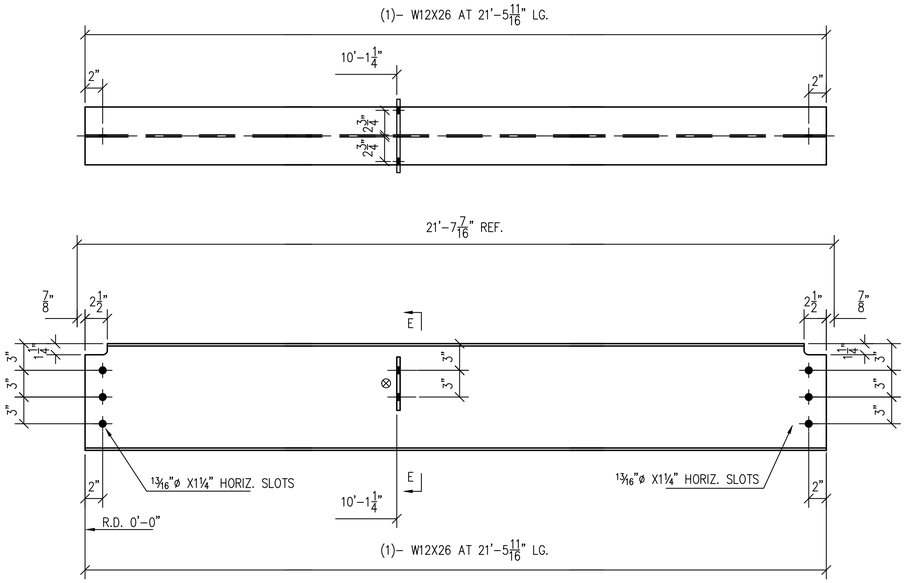

2FB12
(3 REQ.)

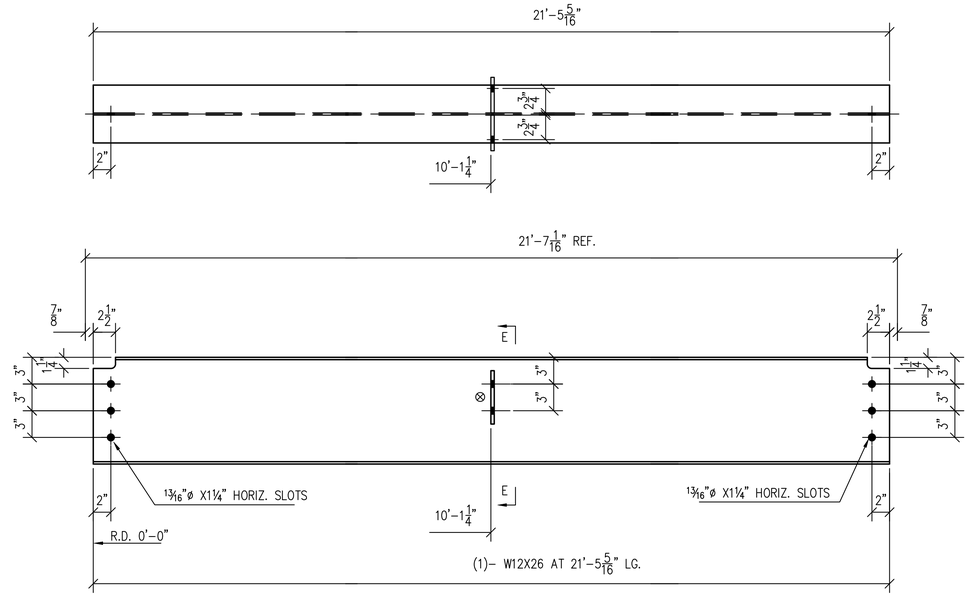

2FB13
(3 REQ.)

BILL OF MATERIALS					
REQ.	PC. MARK	SHAPE	LENGTH		REMARKS
3	2FB12	W12X26	21'	5 11/16"	–
6	pc11	PL3/8X4	0'	6"	–
3	2FB13	W12X26	21'	5 5/16"	–
6	pc11	PL3/8X4	0'	6"	–
2	2FB14	W12X26	21'	5 5/16"	–
4	pc11	PL3/8X4	0'	6"	–

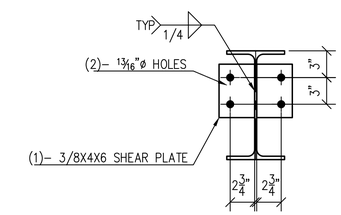

SECTION E–E

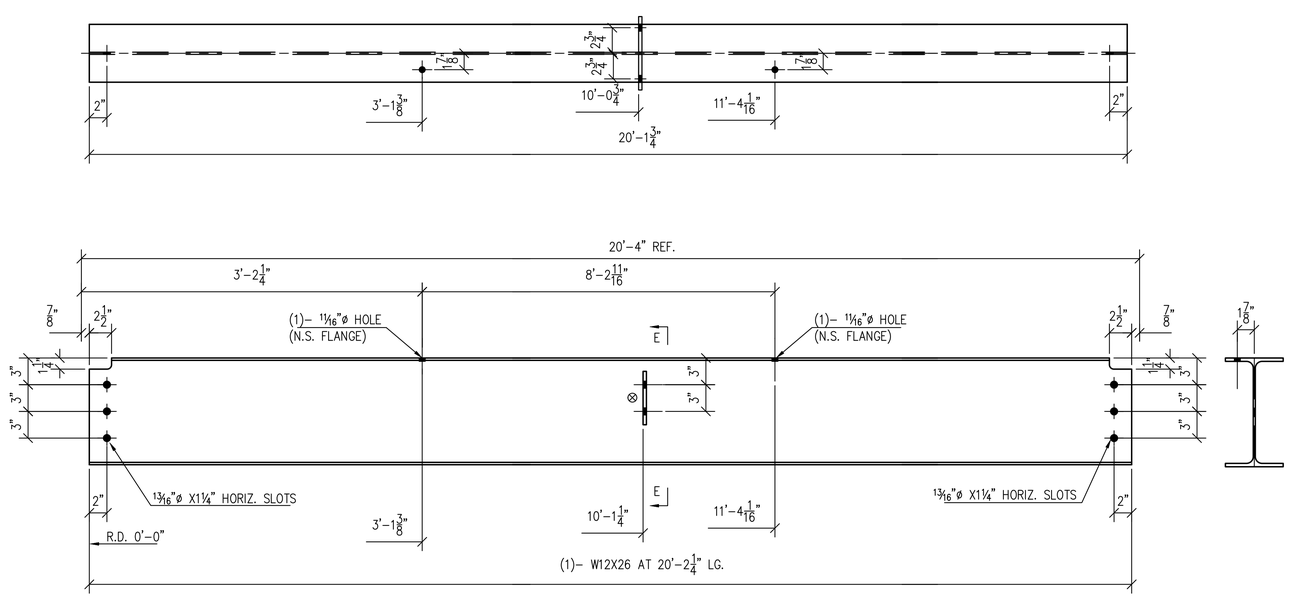

2FB14
(2 REQ.)

FOR FAB. & ERECTION:
4/30/2020

NOTE:
STEEL TO BE AS FOLLOWS
1. WIDE FLANGE TO BE ASTM A992
2. CHANNELS, PLATES AND ANGLES TO BE ASTM A36
3. HSS TO BE ASTM A500 GRADE B

PLAN NORTH

THE FOLLOWING NOTES ARE AN INTEGRAL OF THIS DRAWING AND OUR CONTRACT:

1) THE G.C. IS TO RETURN ONE MARKED-UP COPY TO OUR OFFICE. We require review by both the architect and engineer.
2) If Architect/Engineer marks up drawing "REVISE/REJ" we will construe this action to mean we are in compliance with contract documents and, in fact, these drawings are "APPROVED" or "APPROVED AS NOTED" unless specifically stated otherwise.
3) These drawings are our interpretation of what is necessary to meet your specifications. It is most important, therefore, that they are checked by the G.C./Architect/Engineer against drawings provided by other trades to ensure proper installation to those surrounding materials.
4) This drawing is for the exclusive use of Hidlen Steel.
5) Work areas must be free of all obstructions prior to steel installation date. This includes ducts, pipes, electrical work, and all other obstructions which prevent direct vertical lift of steel to its final location.
6) Should roof or slab penetrations be required, the G.C. is responsible for all roof or slab proection, penetrations and subsequent fire stopping, waterproofing, flashing, etc.
7) Location of holes, clips, cuts for other trades, if required by our contract, MUST be shown and or verified by others on this drawing when submitted for approval.
8) Do not scale this drawing.
9) New steel is shown as [————————], existing steel is shown as [—— —— ——]

STEEL	PAINT	HOLES	BOLTS	ELECTRODES
SEE NOTE	HOT–DIP GALVANIZED	13/16"ø	3/4"ø A325 (U.N.O.)	E7018 (U.N.O.)

NO.	DATE	COMMENTS	NO.	DATE	ISSUED FOR
6	4/30/2020	STAIR – RELEASE FOR FABRICATION	1	4/30/2020	FOR FAB. & ERECTION
5	4/1/2020	PARTIAL RELEASE FOR FABRICATION	1	4/1/2020	FOR FAB. & ERECTION
4	3/30/2020	PARTIAL RELEASE FOR FABRICATION	1	3/31/2020	FOR FAB. & ERECTION
3	3/26/2020	PARTIAL RELEASE FOR FABRICATION	1	3/26/2020	FOR FAB. & ERECTION
2	3/24/2020	PARTIAL RELEASE FOR FABRICATION	1	3/24/2020	FOR FAB. & ERECTION
1	2/7/2020	REVISED PER DESIGN CHANGE	1	2/8/2020	APPROVAL
		FIRST ISSUE	1	11/6/2019	APPROVAL

REVISIONS — PRINT RECORD

DWG TITLE
ROOF DUNNAGE
FRAMING, STAIR, & GUARDRAILS

PROJECT NAME

ARCH'T –			DWG REF
ENG'R			DWG REF S–101.00 S–102.00
CONT'R		SUPER	
DRN BY TS/OC	CHK'D BY	JOB NO. 4550	SEARCH –	DWG NO. 2F
DATE 11/4/19	DATE			

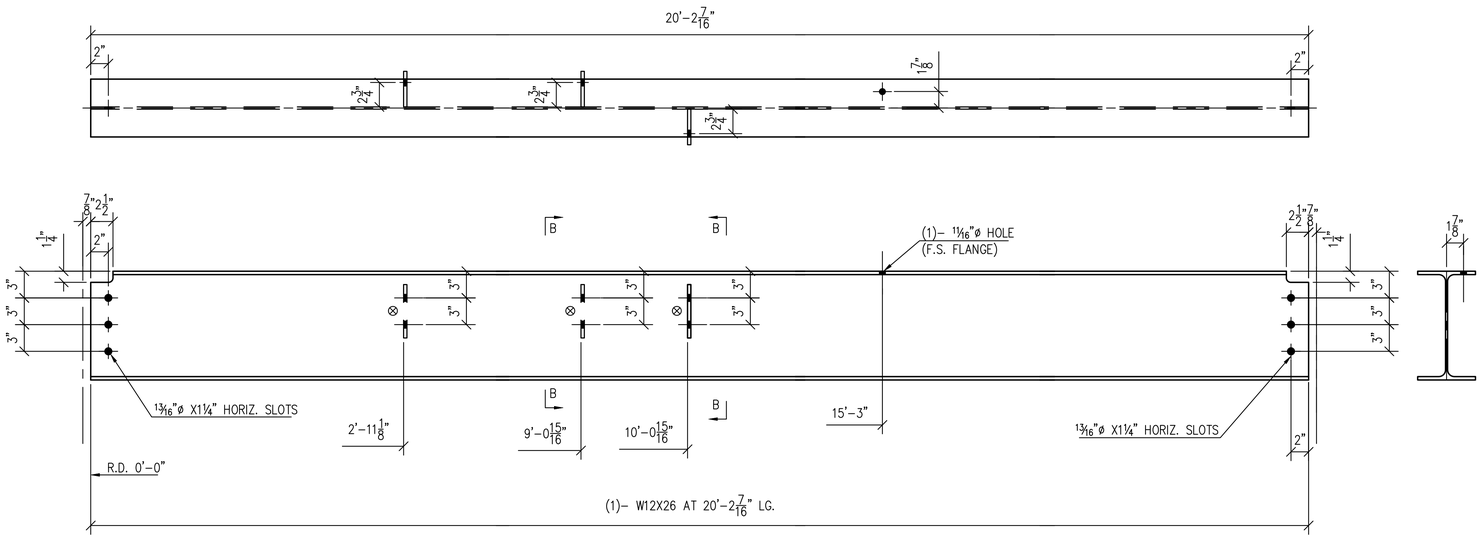

2GB15
(1 REQ.)

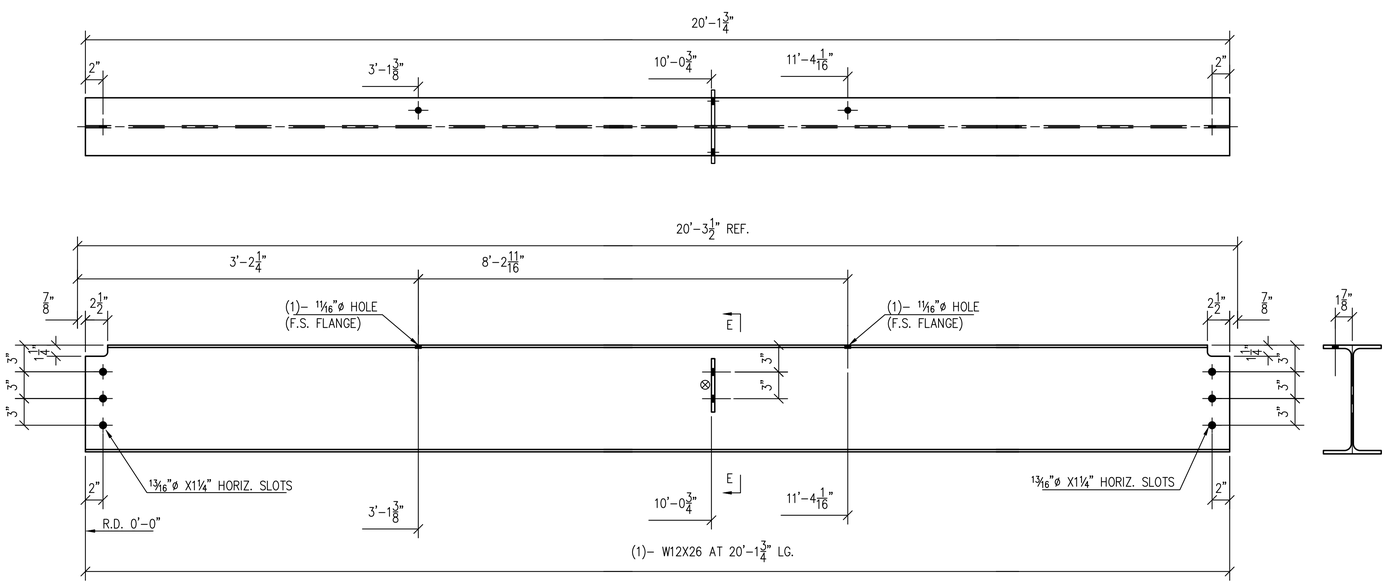

2GB16
(2 REQ.)

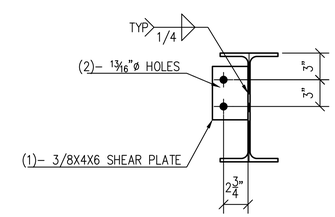

SECTION B-B

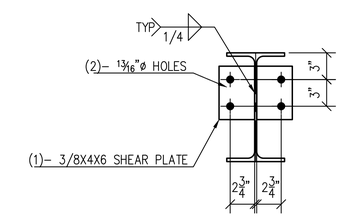

SECTION E-E

BILL OF MATERIALS

REQ.	PC. MARK	SHAPE	LENGTH		REMARKS
1	2GB15	W12X26	20'	2 7/16"	–
3	pc11	PL3/8X4	0'	6"	–
2	2GB16	W12X26	20'	1 3/4"	–
4	pc11	PL3/8X4	0'	6"	–

FOR FAB. & ERECTION:
4/30/2020

NOTE:
STEEL TO BE AS FOLLOWS
1. WIDE FLANGE TO BE ASTM A992
2. CHANNELS, PLATES AND ANGLES TO BE ASTM A36
3. HSS TO BE ASTM A500 GRADE B

PLAN NORTH

THE FOLLOWING NOTES ARE AN INTEGRAL OF THIS DRAWING AND OUR CONTRACT:

1) THE G.C. IS TO RETURN ONE MARKED-UP COPY TO OUR OFFICE. We require review by both the architect and engineer.
2) If Architect/Engineer marks up drawing "REVISE(D)" we will construe this action to mean: we are in compliance with contract documents and, in fact, these drawings are "APPROVED" or "APPROVED AS NOTED" unless specifically stated otherwise.
3) These drawings are our interpretation of what is necessary to meet your specifications. It is most important, therefore, that they are checked by the G.C./Architect/Engineer against drawings provided by other trades to ensure proper installation to those surrounding materials.
4) This drawing is for the exclusive use of Holden Steel.
5) Work areas must be free of all obstructions prior to steel installation date. This includes ducts, pipes, electrical work, and all other obstructions which prevent direct vertical lift of steel to its final location.
6) Should roof or slab penetrations be required, the G.C. is responsible for all roof or slab procution, penetrations and subsequent fire stopping, waterproofing, flashing, etc.
7) Location of holes, clips, cuts for other trades, if required by our contract, MUST be shown and or verified by others on this drawing when submitted for approval.
8) Do not scale this drawing.
9) New steel is shown as [————————], existing steel is shown as [— — — —]

STEEL	PAINT	HOLES	BOLTS	ELECTRODES
SEE NOTE	HOT-DIP GALVANIZED	13/16"ø	3/4"ø A325 (U.N.O.)	E7018 (U.N.O.)

NO.	DATE	COMMENTS	NO.	DATE	ISSUED FOR
6	4/30/2020	STAIR – RELEASE FOR FABRICATION	1	4/30/2020	FOR FAB. & ERECTION
5	4/1/2020	PARTIAL RELEASE FOR FABRICATION	1	4/1/2020	FOR FAB. & ERECTION
4	3/30/2020	PARTIAL RELEASE FOR FABRICATION	1	3/31/2020	FOR FAB. & ERECTION
3	3/26/2020	PARTIAL RELEASE FOR FABRICATION	1	3/26/2020	FOR FAB. & ERECTION
2	3/24/2020	PARTIAL RELEASE FOR FABRICATION	1	3/24/2020	FOR FAB. & ERECTION
1	2/7/2020	REVISED PER DESIGN CHANGE	1	2/8/2020	APPROVAL
		FIRST ISSUE	1	11/8/2019	APPROVAL

REVISIONS — PRINT RECORD

DWG TITLE
ROOF DUNNAGE
FRAMING, STAIR, & GUARDRAILS

PROJECT NAME

ARCH'T –				DWG REF
ENG'R				DWG REF S-101.00 S-102.00
CONT'R			SUPER	
DRN BY TS/OC	CHK'D BY	JOB NO.	SEARCH	DWG NO.
DATE 11/4/19	DATE	4550	–	2G

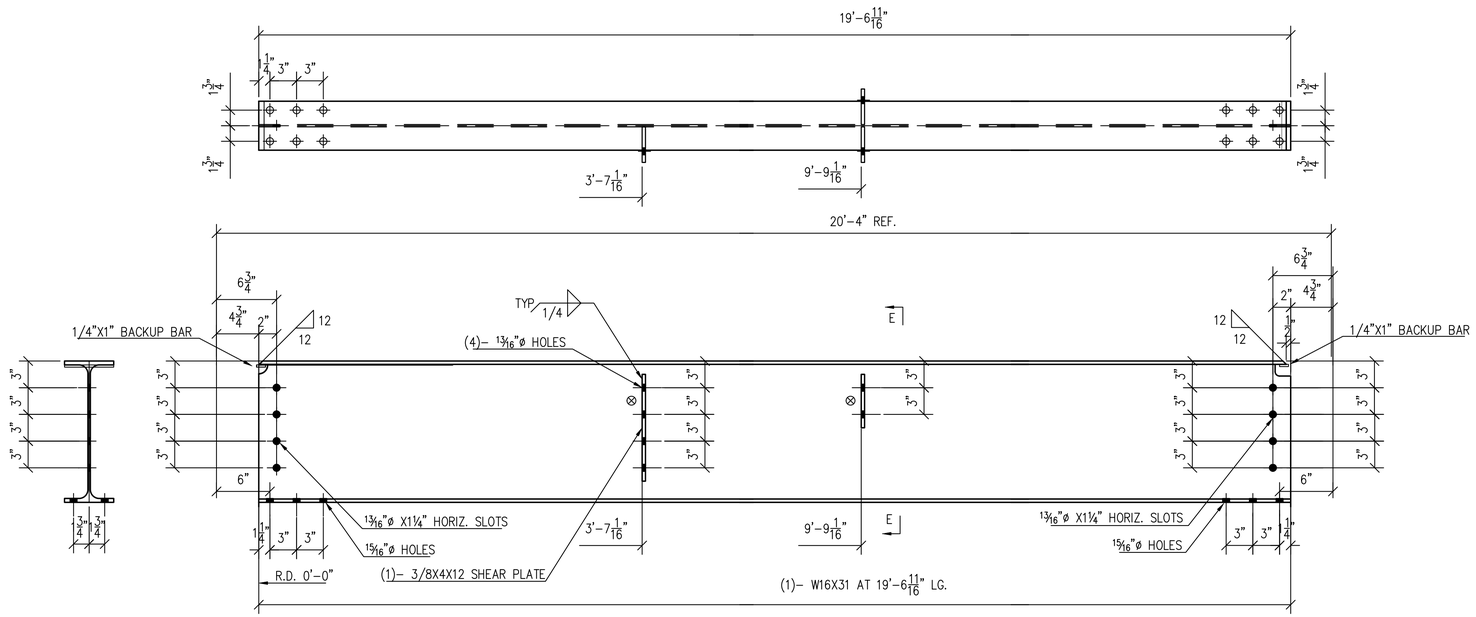

2HB18
(1 REQ.)

BILL OF MATERIALS					
REQ.	PC. MARK	SHAPE	LENGTH		REMARKS
1	2HB18	W16X31	19'	6 11/16"	–
2	pc11	PL3/8X4	0'	6"	–
1	pa17	PL3/8X4	0'	12"	–
1	2HB19	W16X31	19'	6"	–
2	pc11	PL3/8X4	0'	6"	–

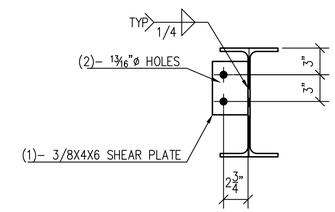

SECTION B-B

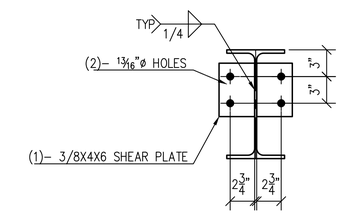

SECTION E-E

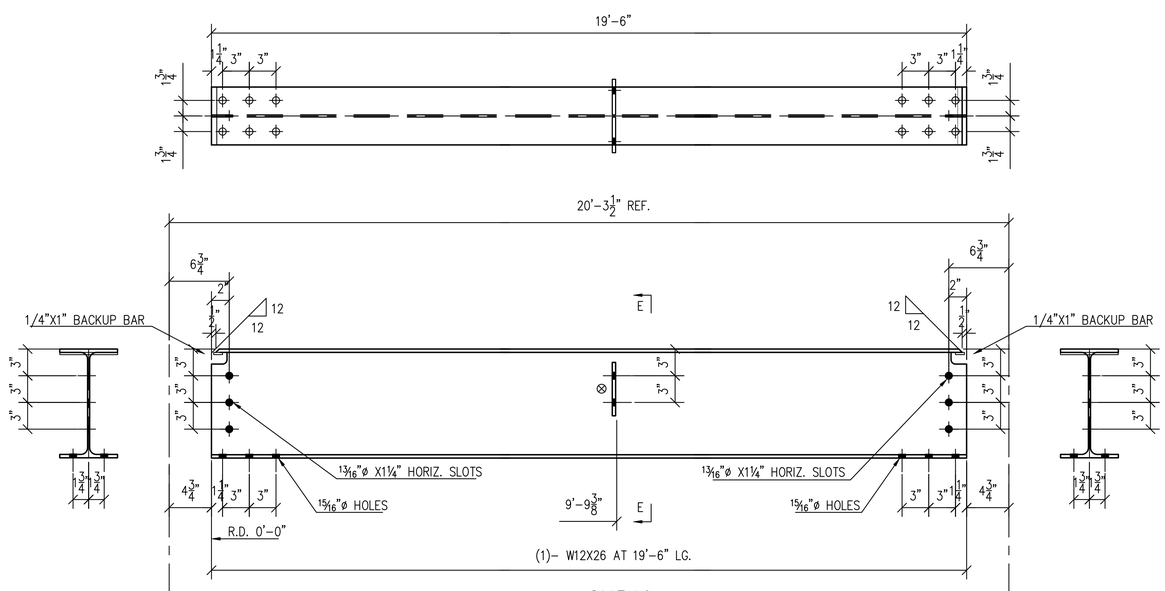

2HB19
(1 REQ.)

FOR FAB. & ERECTION:
4/30/2020

NOTE:
STEEL TO BE AS FOLLOWS
1. WIDE FLANGE TO BE ASTM A992
2. CHANNELS, PLATES AND ANGLES TO BE ASTM A36
3. HSS TO BE ASTM A500 GRADE B

PLAN NORTH

THE FOLLOWING NOTES ARE AN INTEGRAL OF THIS DRAWING AND OUR CONTRACT:

1) THE G.C. IS TO RETURN ONE MARKED-UP COPY TO OUR OFFICE. We require review by both the architect and engineer.
2) If Architect/Engineer marks up drawing "REVISE/REJ" we will construe this action to mean we are in compliance with contract documents and, in fact, these drawings are "APPROVED" or "APPROVED AS NOTED" unless specifically stated otherwise.
3) These drawings are our interpretation of what is necessary to meet your specifications. It is most important, therefore, that they are checked by the G.C./Architect/Engineer against drawings provided by other trades to ensure proper installation to those surrounding materials.
4) This drawing is for the exclusive use of Hallen Steel.
5) Work areas must be free of all obstructions prior to steel installation date. This includes ducts, pipes, electrical work, and all other obstructions which prevent direct vertical lift of steel to its final location.
6) Should roof or slab penetrations be required, the G.C. is responsible for all roof or slab proection, penetrations and subsequent fire stopping, waterproofing, flashing, etc.
7) Location of holes, clips, cuts for other trades, if required by our contract, MUST be shown and or verified by others on this drawing when submitted for approval.
8) Do not scale this drawing.
9) New steel is shown as [————————], existing steel is shown as [—— —— ——]

STEEL	PAINT	HOLES	BOLTS	ELECTRODES
SEE NOTE	HOT-DIP GALVANIZED	13/16"ø	3/4"ø A325 (U.N.O.)	E7018 (U.N.O.)

NO.	DATE	COMMENTS	NO.	DATE	ISSUED FOR
6	4/30/2020	STAIR – RELEASE FOR FABRICATION	1	4/30/2020	FOR FAB. & ERECTION
5	4/1/2020	PARTIAL RELEASE FOR FABRICATION	1	4/1/2020	FOR FAB. & ERECTION
4	3/30/2020	PARTIAL RELEASE FOR FABRICATION	1	3/31/2020	FOR FAB. & ERECTION
3	3/26/2020	PARTIAL RELEASE FOR FABRICATION	1	3/26/2020	FOR FAB. & ERECTION
2	3/24/2020	PARTIAL RELEASE FOR FABRICATION	1	3/24/2020	FOR FAB. & ERECTION
1	2/7/2020	REVISED PER DESIGN CHANGE	1	2/8/2020	APPROVAL
		FIRST ISSUE	1	11/6/2019	APPROVAL

REVISIONS — PRINT RECORD

DWG TITLE
ROOF DUNNAGE
FRAMING, STAIR, & GUARDRAILS

PROJECT NAME

ARCH'T –			DWG REF
ENG'R			DWG REF S-101.00 S-102.00
CONT'R			SUPER
DRN BY TS/OC	CHK'D BY	JOB NO. 4550	SEARCH –	DWG NO. 2H
DATE 11/4/19	DATE			

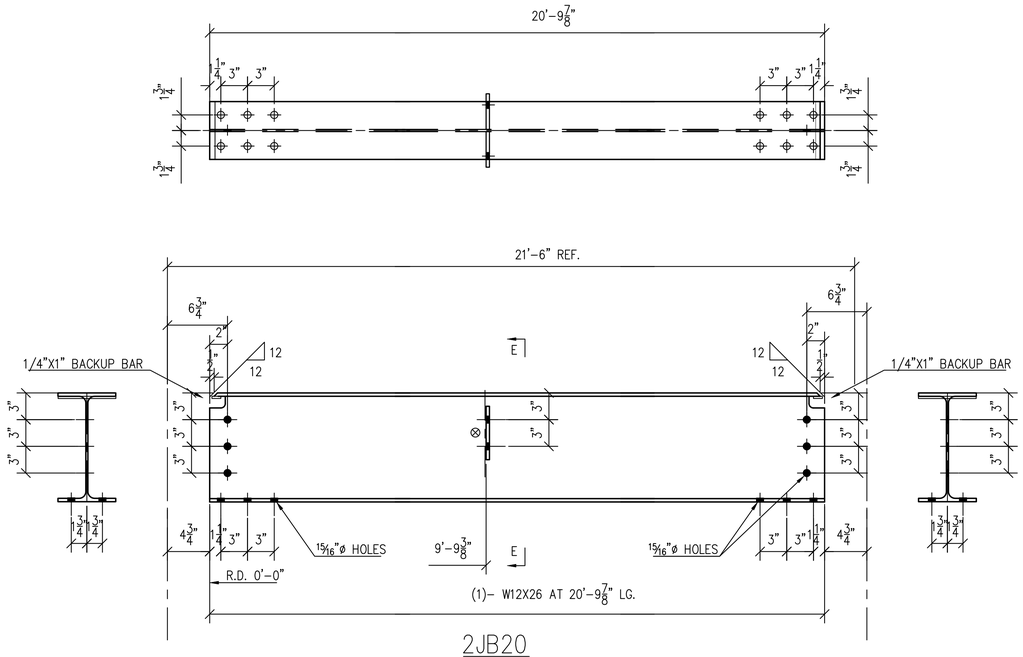

2JB20
(1 REQ.)

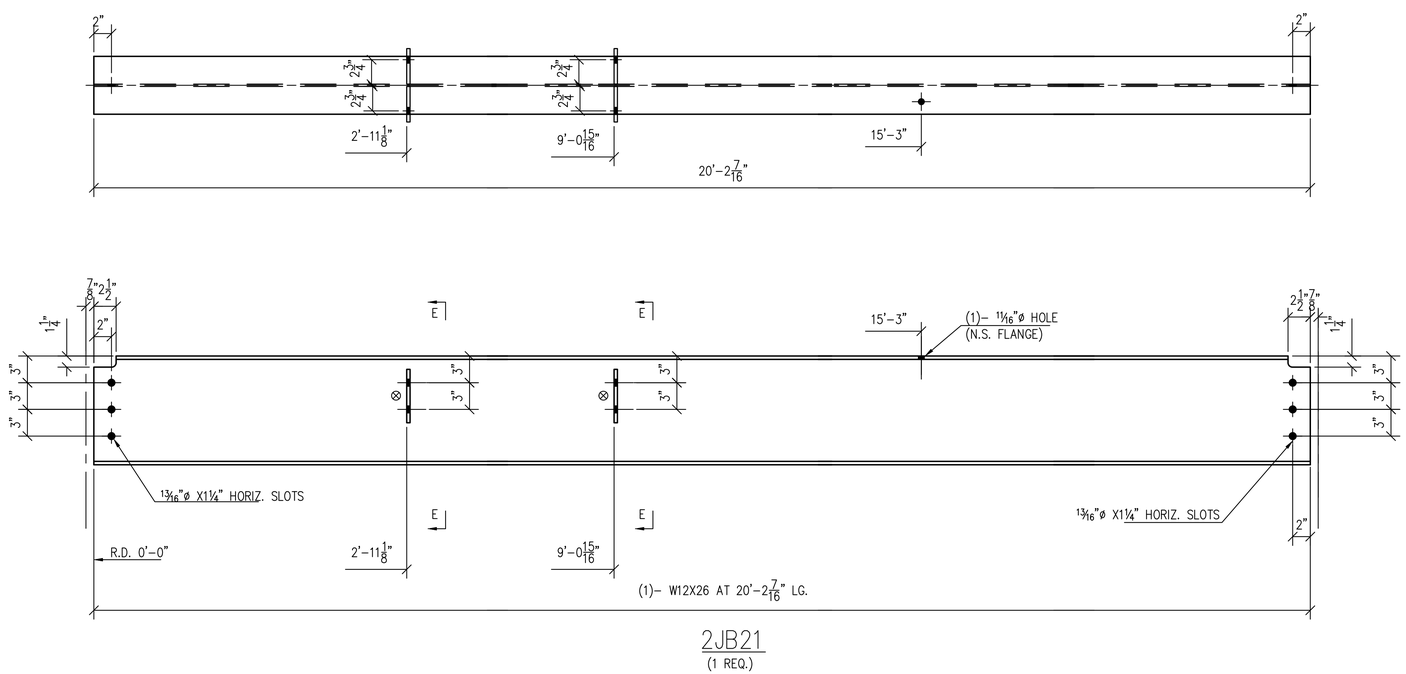

2JB21
(1 REQ.)

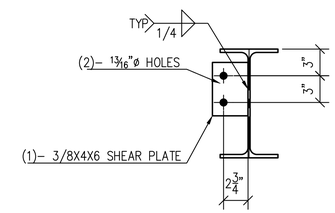

SECTION B-B

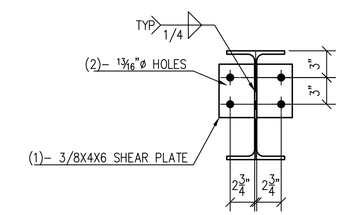

SECTION E-E

BILL OF MATERIALS					
REQ.	PC. MARK	SHAPE	LENGTH		REMARKS
1	2JB20	W12X26	20'	9 7/8"	–
2	pc11	PL3/8X4	0'	6"	–
1	2JB21	W12X26	20'	2 7/16"	–
4	pc11	PL3/8X4	0'	6"	–

PLAN NORTH

THE FOLLOWING NOTES ARE AN INTEGRAL OF THIS DRAWING AND OUR CONTRACT:

1) THE G.C. IS TO RETURN ONE MARKED-UP COPY TO OUR OFFICE. We require review by both the architect and engineer.
2) If Architect/Engineer marks up drawing "REVISED" we will construe this action to mean we are in compliance with contract documents and, in fact, these drawings are "APPROVED" or "APPROVED AS NOTED" unless specifically stated otherwise.
3) These drawings are our interpretation of what is necessary to meet your specifications. It is most important, therefore, that they are checked by the G.C./Architect/Engineer against drawings provided by other trades to ensure proper installation to those surrounding materials.
4) This drawing is for the exclusive use of Hidden Steel.
5) Work areas must be free of all obstructions prior to steel installation date. This includes ducts, pipes, electrical work, and all other obstructions which prevent direct vertical lift of steel to its final location.
6) Should roof or slab penetrations be required, the G.C. is responsible for all roof or slab proection, penetrations and subsequent fire stopping, waterproofing, flashing, etc.
7) Location of holes, clips, cuts for other trades, if required by our contract, MUST be shown and or verified by others on this drawing when submitted for approval.
8) Do not scale this drawing.
9) New steel is shown as [————————], existing steel is shown as [—— —— ——]

STEEL	PAINT	HOLES	BOLTS	ELECTRODES
SEE NOTE	HOT-DIP GALVANIZED	13/16"ø	3/4"ø A325 (U.N.O.)	E7018 (U.N.O.)

NO.	DATE	COMMENTS	NO.	DATE	ISSUED FOR
6	4/30/2020	STAIR – RELEASE FOR FABRICATION	1	4/30/2020	FOR FAB. & ERECTION
5	4/1/2020	PARTIAL RELEASE FOR FABRICATION	1	4/1/2020	FOR FAB. & ERECTION
4	3/31/2020	PARTIAL RELEASE FOR FABRICATION	1	3/31/2020	FOR FAB. & ERECTION
3	3/26/2020	PARTIAL RELEASE FOR FABRICATION	1	3/26/2020	FOR FAB. & ERECTION
2	3/24/2020	PARTIAL RELEASE FOR FABRICATION	1	3/24/2020	FOR FAB. & ERECTION
1	2/7/2020	REVISED PER DESIGN CHANGE	1	2/8/2020	APPROVAL
		FIRST ISSUE	1	11/8/2019	APPROVAL

REVISIONS — PRINT RECORD

FOR FAB. & ERECTION:
4/30/2020

DWG TITLE
ROOF DUNNAGE
FRAMING, STAIR, & GUARDRAILS

PROJECT NAME

ARCH'T –			DWG REF
ENG'R			DWG REF S-101.00 S-102.00
CONT'R			SUPER
DRN BY TS/OC	CHK'D BY	JOB NO. 4550	SEARCH –	DWG NO. 2J
DATE 11/4/19	DATE			

NOTE:
STEEL TO BE AS FOLLOWS
1. WIDE FLANGE TO BE ASTM A992
2. CHANNELS, PLATES AND ANGLES TO BE ASTM A36
3. HSS TO BE ASTM A500 GRADE B

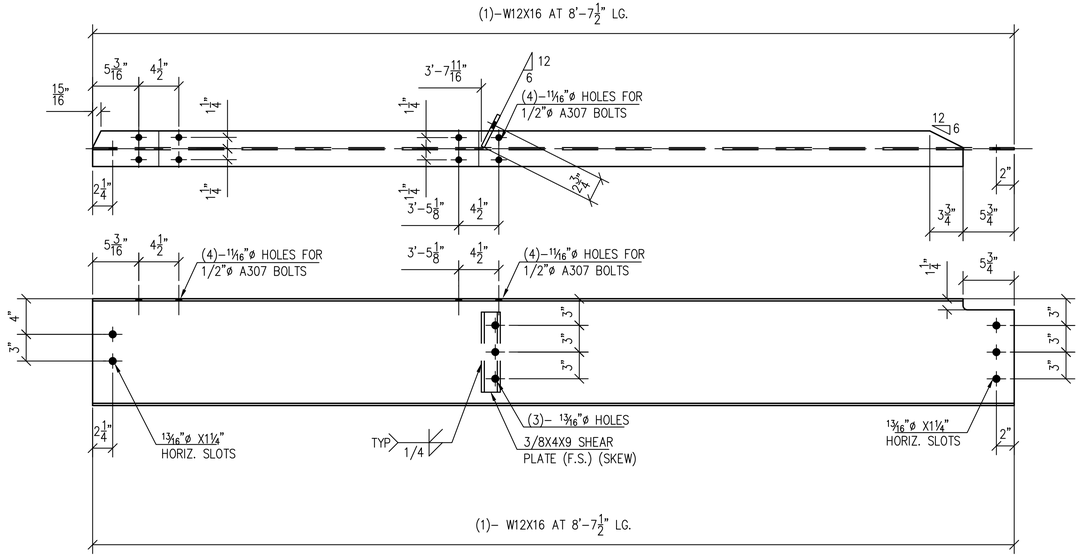

2KB22
(1 REQ.)

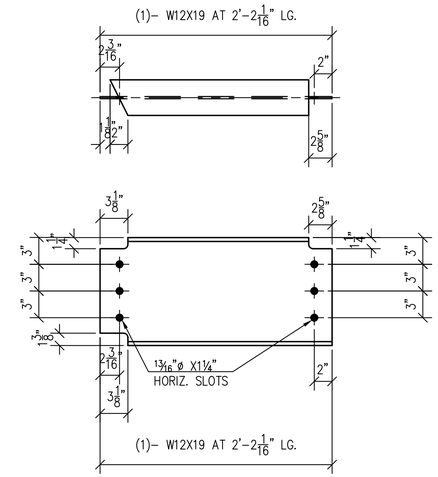

2KB23
(1 REQ.)

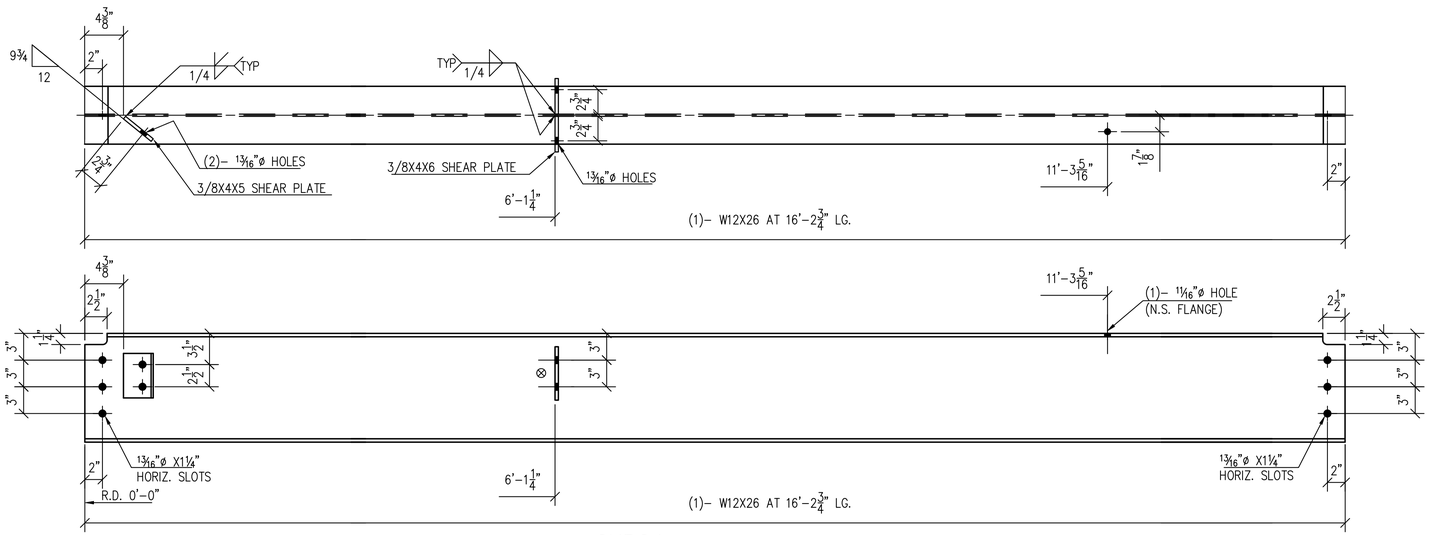

2KB24
(1 REQ.)

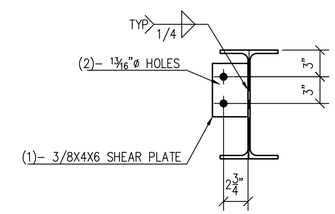

SECTION B–B

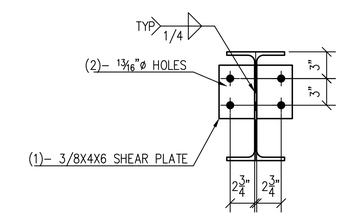

SECTION E–E

BILL OF MATERIALS

REQ.	PC. MARK	SHAPE	LENGTH		REMARKS
1	2KB22	W12X16	8'	7½"	–
1	pc19	PL3/8X4	0'	9"	–
1	2KB23	W12X19	2'	2 1/16"	–
1	2KB24	W12X26	16'	2¾"	–
3	pc11	PL3/8X4	0'	6"	–

PLAN NORTH

THE FOLLOWING NOTES ARE AN INTEGRAL OF THIS DRAWING AND OUR CONTRACT:

1) THE G.C. IS TO RETURN ONE MARKED-UP COPY TO OUR OFFICE. We require review by both the architect and engineer.
2) If Architect/Engineer marks up drawing "REVISE/R" we will consider this action to mean: we are in compliance with contract documents and, in fact, these drawings are "APPROVED" or "APPROVED AS NOTED" unless specifically stated otherwise.
3) These drawings are our interpretation of what is necessary to meet your specifications. It is most important, therefore, that they are checked by the G.C./Architect/Engineer against drawings provided by other trades to ensure proper installation to those surrounding materials.
4) This drawing is for the exclusive use of Hidden Steel.
5) Work areas must be free of all obstructions prior to steel installation date. This includes ducts, pipes, electrical work, and all other obstructions which prevent direct vertical lift of steel to its final location.
6) Should roof or slab penetrations be required, the G.C. is responsible for all roof or slab provision, penetrations and subsequent fire stopping, waterproofing, flashing, etc.
7) Location of holes, clips, cuts for other trades, if required by our contract, MUST be shown and or verified by others on this drawing when submitted for approval.
8) Do not scale this drawing.
9) New steel is shown as [———————], existing steel is shown as [—— —— ——]

STEEL	PAINT	HOLES	BOLTS	ELECTRODES
SEE NOTE	HOT–DIP GALVANIZED	13/16"ø	3/4"ø A325 (U.N.O.)	E7018 (U.N.O.)

NO.	DATE	COMMENTS	NO.	DATE	ISSUED FOR
6	4/30/2020	STAIR – RELEASE FOR FABRICATION	1	4/30/2020	FOR FAB. & ERECTION
5	4/1/2020	PARTIAL RELEASE FOR FABRICATION	1	4/1/2020	FOR FAB. & ERECTION
4	3/30/2020	PARTIAL RELEASE FOR FABRICATION	1	3/31/2020	FOR FAB. & ERECTION
3	3/26/2020	PARTIAL RELEASE FOR FABRICATION	1	3/26/2020	FOR FAB. & ERECTION
2	3/24/2020	PARTIAL RELEASE FOR FABRICATION	1	3/24/2020	FOR FAB. & ERECTION
1	2/7/2020	REVISED PER DESIGN CHANGE	1	2/8/2020	APPROVAL
		FIRST ISSUE	1	11/8/2019	APPROVAL

REVISIONS — PRINT RECORD

FOR FAB. & ERECTION:
4/30/2020

NOTE:
STEEL TO BE AS FOLLOWS
1. WIDE FLANGE TO BE ASTM A992
2. CHANNELS, PLATES AND ANGLES TO BE ASTM A36
3. HSS TO BE ASTM A500 GRADE B

DWG TITLE
ROOF DUNNAGE
FRAMING, STAIR, & GUARDRAILS

PROJECT NAME

ARCH'T –				DWG REF
ENG'R				DWG REF S–101.00 S–102.00
CONT'R			SUPER	
DRN BY TS/OC	CHK'D BY	JOB NO. 4550	SEARCH –	DWG NO. 2K
DATE 11/4/19	DATE			

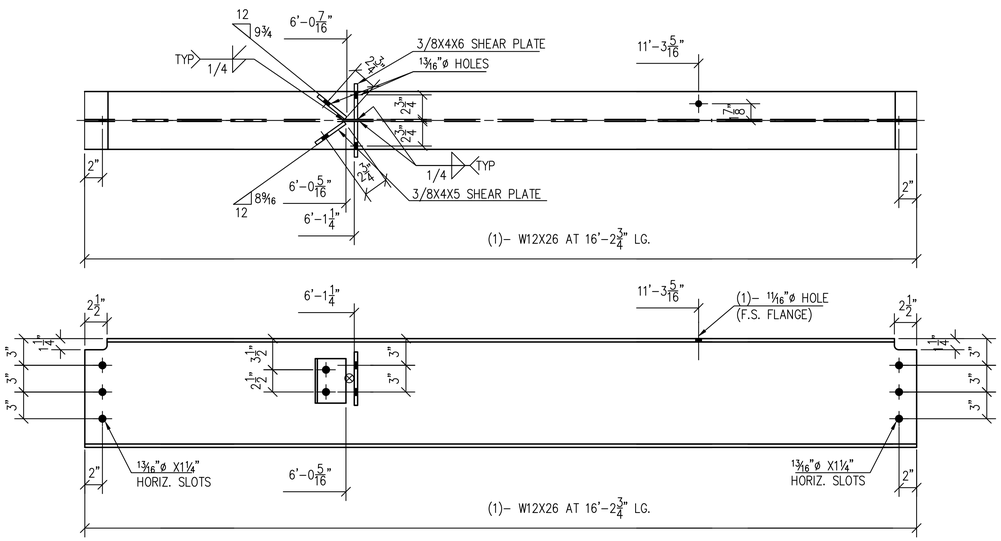

2LB25
(1 REQ.)

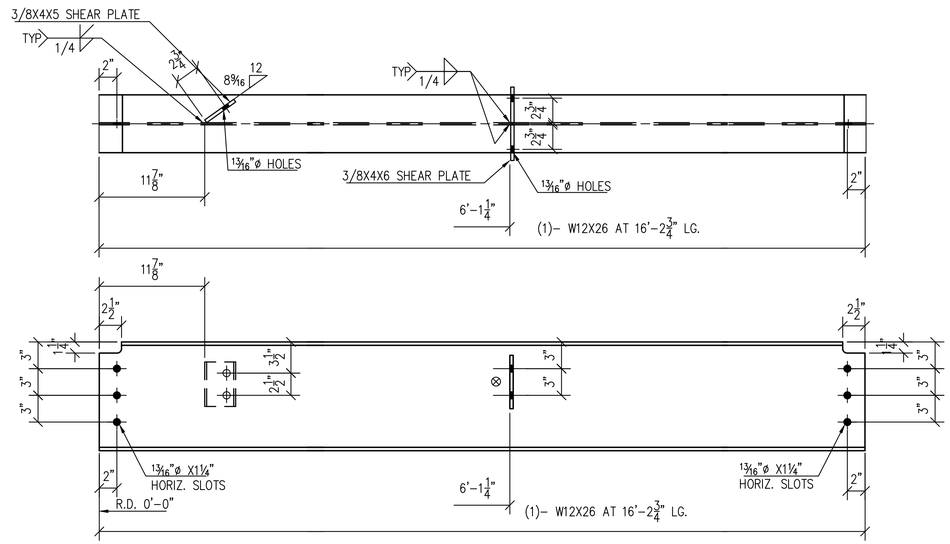

2LB26
(1 REQ.)

BILL OF MATERIALS					
REQ.	PC. MARK	SHAPE	LENGTH		REMARKS
1	2LB25	W12X26	16'	2 3/4"	–
2	pc11	PL3/8X4	0'	6"	–
2	pa20	PL3/8X4	0'	5"	–
1	2LB26	W12X26	16'	2 3/4"	–
2	pc11	PL3/8X4	0'	6"	–
1	pa20	PL3/8X4	0'	5"	–
1	2LB27	W12X26	16'	2 13/16"	–
2	pc11	PL3/8X4	0'	6"	–
1	pb20	PL1/2X7	0'	9"	

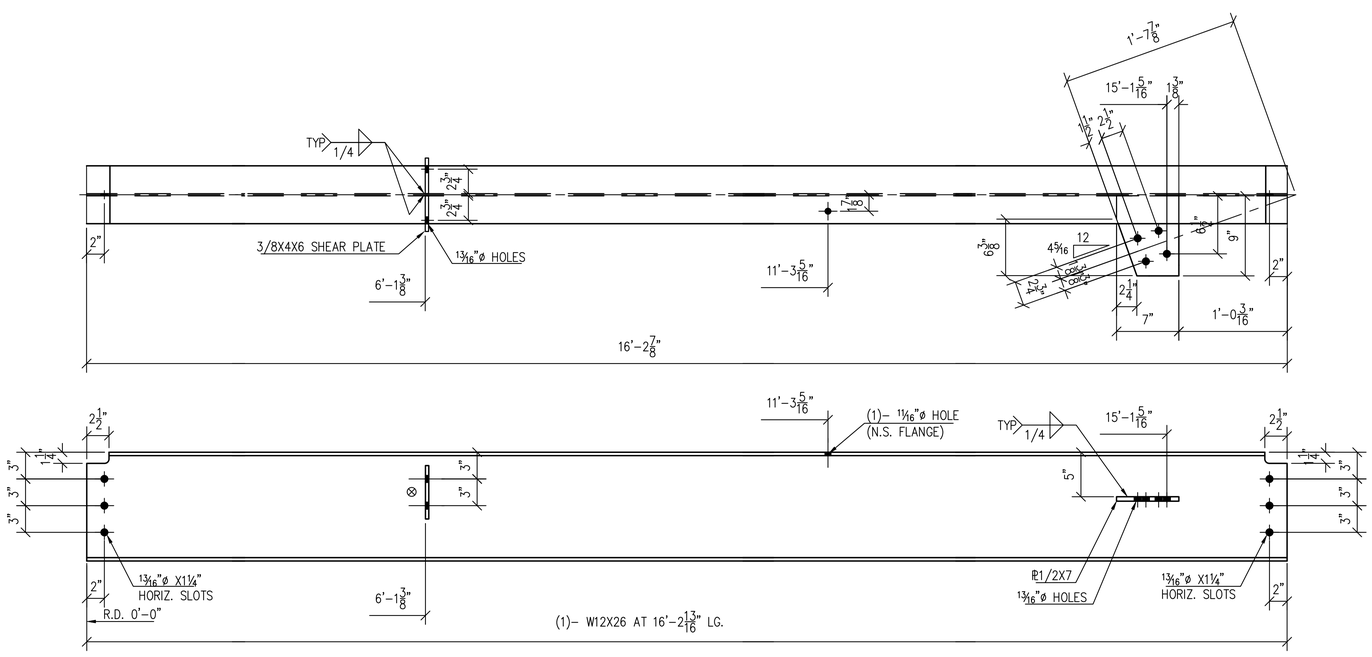

2LB27
(1 REQ.)

FOR FAB. & ERECTION:
4/30/2020

NOTE:
STEEL TO BE AS FOLLOWS
1. WIDE FLANGE TO BE ASTM A992
2. CHANNELS, PLATES AND ANGLES TO BE ASTM A36
3. HSS TO BE ASTM A500 GRADE B

PLAN NORTH

THE FOLLOWING NOTES ARE AN INTEGRAL OF THIS DRAWING AND OUR CONTRACT:

1) THE G.C. IS TO RETURN ONE MARKED-UP COPY TO OUR OFFICE. We require review by both the architect and engineer.
2) If Architect/Engineer marks up drawing "REVISED" we will consider this action to mean: we are in compliance with contract documents and, in fact, these drawings are "APPROVED" or "APPROVED AS NOTED" unless specifically stated otherwise.
3) These drawings are our interpretation of what is necessary to meet your specifications. It is most important, therefore, that they are checked by the G.C./Architect/Engineer against drawings provided by other trades to assure proper installation to those surrounding materials.
4) This drawing is for the exclusive use of Hallen Steel.
5) Work areas must be free of all obstructions prior to steel installation date. This includes ducts, pipes, electrical work, and all other obstructions which prevent direct vertical lift of steel to its final location.
6) Should roof or slab penetrations be required, the G.C. is responsible for all roof or slab procedure, penetrations and subsequent fire stopping, waterproofing, flashing, etc.
7) Location of holes, clips, cuts for other trades, if required by our contract, MUST be shown and or verified by others on this drawing when submitted for approval.
8) Do not scale this drawing.
9) New steel is shown as [————], existing steel is shown as [—— —— ——]

STEEL	PAINT	HOLES	BOLTS	ELECTRODES
SEE NOTE	HOT–DIP GALVANIZED	13/16"ø	3/4"ø A325 (U.N.O.)	E7018 (U.N.O.)

NO.	DATE	COMMENTS	NO.	DATE	ISSUED FOR
6	4/30/2020	STAIR – RELEASE FOR FABRICATION	1	4/30/2020	FOR FAB. & ERECTION
5	4/1/2020	PARTIAL RELEASE FOR FABRICATION	1	4/1/2020	FOR FAB. & ERECTION
4	3/30/2020	PARTIAL RELEASE FOR FABRICATION	1	3/31/2020	FOR FAB. & ERECTION
3	3/26/2020	PARTIAL RELEASE FOR FABRICATION	1	3/26/2020	FOR FAB. & ERECTION
2	3/24/2020	PARTIAL RELEASE FOR FABRICATION	1	3/24/2020	FOR FAB. & ERECTION
1	2/7/2020	REVISED PER DESIGN CHANGE	1	2/8/2020	APPROVAL
		FIRST ISSUE	1	11/8/2019	APPROVAL

REVISIONS — PRINT RECORD

DWG TITLE
ROOF DUNNAGE
FRAMING, STAIR, & GUARDRAILS

PROJECT NAME

ARCH'T –			DWG REF
ENG'R			DWG REF S–101.00 S–102.00
CONT'R		SUPER	
DRN BY TS/OC	CHK'D BY	JOB NO. 4550	SEARCH –	DWG NO. 2L
DATE 11/4/19	DATE			

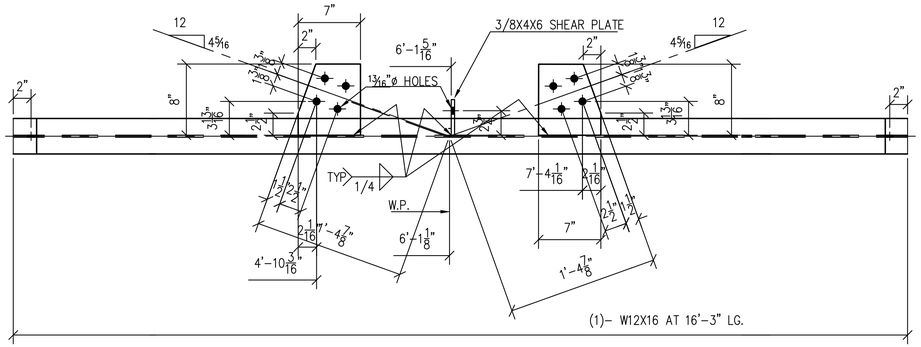

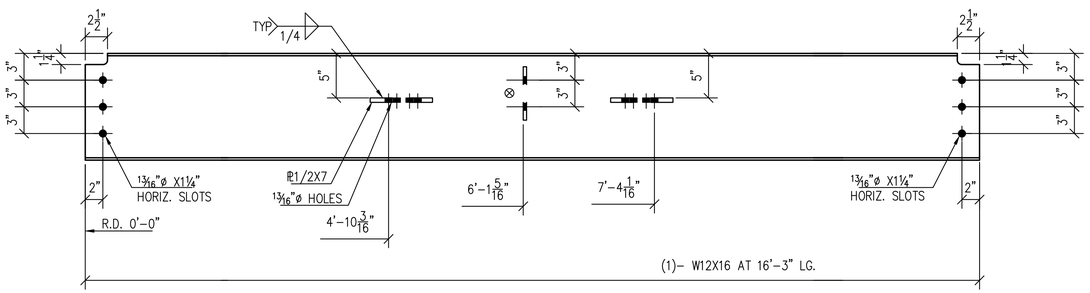

2MB28
(1 REQ.)

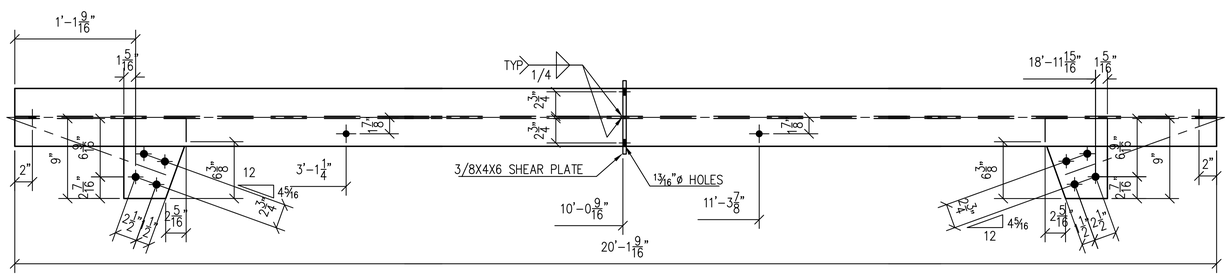

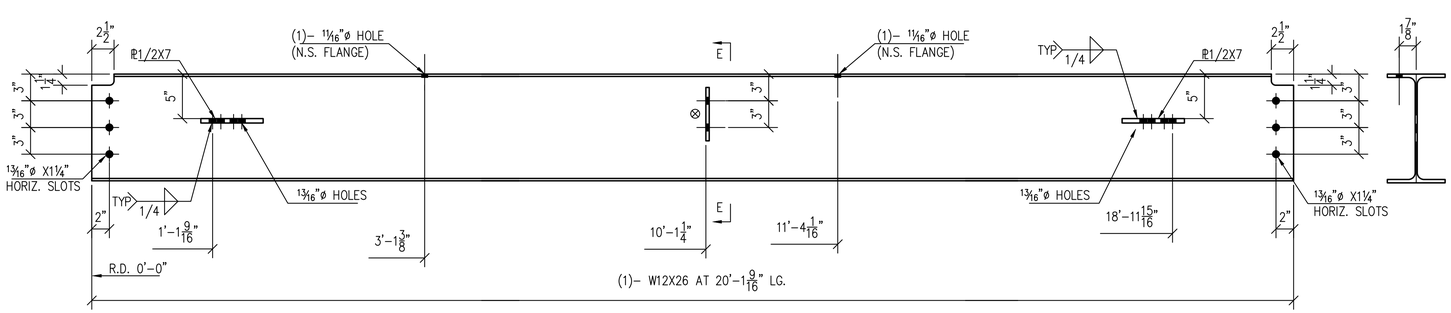

2MB29
(1 REQ.)

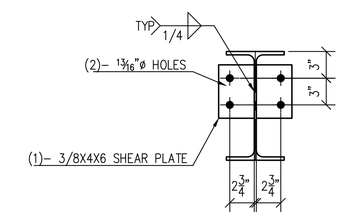

SECTION E-E

BILL OF MATERIALS					
REQ.	PC. MARK	SHAPE	LENGTH		REMARKS
1	2MB28	W12X16	16'	3"	–
1	pc11	PL3/8X4	0'	6"	–
2	pa21	PL1/2X7	0'	8"	
1	2MB29	W12X26	20'	1 9/16"	–
2	pc11	PL3/8X4	0'	6"	–
2	pb21	PL1/2X7	0'	9"	

PLAN NORTH

THE FOLLOWING NOTES ARE AN INTEGRAL OF THIS DRAWING AND OUR CONTRACT:

1) THE G.C. IS TO RETURN ONE MARKED-UP COPY TO OUR OFFICE. We require review by both the architect and engineer.
2) If Architect/Engineer marks up drawing "REVISED" we will construe this action to mean we are in compliance with contract documents and, in fact, these drawings are "APPROVED" or "APPROVED AS NOTED" unless specifically stated otherwise.
3) These drawings are our interpretation of what is necessary to meet your specifications. It is most important, therefore, that they are checked by the G.C./Architect/Engineer against drawings provided by other trades to ensure proper installation to those surrounding materials.
4) This drawing is for the exclusive use of Hallen Steel.
5) Work areas must be free of all obstructions prior to steel installation date. This includes ducts, pipes, electrical work, and all other obstructions which prevent direct vertical lift of steel to its final location.
6) Should roof or slab penetrations be required, the G.C. is responsible for all roof or slab protection, penetrations and subsequent fire stopping, waterproofing, flashing, etc.
7) Location of holes, clips, cuts for other trades, if required by our contract, MUST be shown and or verified by others on this drawing when submitted for approval.
8) Do not scale this drawing.
9) New steel is shown as [———], existing steel is shown as [— — —]

STEEL	PAINT	HOLES	BOLTS	ELECTRODES
SEE NOTE	HOT-DIP GALVANIZED	13/16"ø	3/4"ø A325 (U.N.O.)	E7018 (U.N.O.)

NO.	DATE	COMMENTS	NO.	DATE	ISSUED FOR
4	4/30/2020	STAIR – RELEASE FOR FABRICATION	1	4/30/2020	FOR FAB. & ERECTION
3	4/1/2020	PARTIAL RELEASE FOR FABRICATION	1	4/1/2020	FOR FAB. & ERECTION
2	3/30/2020	PARTIAL RELEASE FOR FABRICATION	1	3/31/2020	FOR FAB. & ERECTION
1	3/26/2020	PARTIAL RELEASE FOR FABRICATION	1	3/26/2020	FOR FAB. & ERECTION
2	3/24/2020	PARTIAL RELEASE FOR FABRICATION	1	3/24/2020	FOR FAB. & ERECTION
1	2/7/2020	REVISED PER DESIGN CHANGE	1	2/8/2020	APPROVAL
		FIRST ISSUE	1	11/8/2019	APPROVAL

REVISIONS — PRINT RECORD

FOR FAB. & ERECTION:
4/30/2020

DWG TITLE
ROOF DUNNAGE
FRAMING, STAIR, & GUARDRAILS

PROJECT NAME

ARCH'T –
ENG'R
CONT'R
SUPER

DWG REF
DWG REF S-101.00 S-102.00

DRN BY	CHK'D BY	JOB NO.	SEARCH	DWG NO.
TS/OC		4550	–	2M
DATE 11/4/19	DATE			

NOTE:
STEEL TO BE AS FOLLOWS
1. WIDE FLANGE TO BE ASTM A992
2. CHANNELS, PLATES AND ANGLES TO BE ASTM A36
3. HSS TO BE ASTM A500 GRADE B

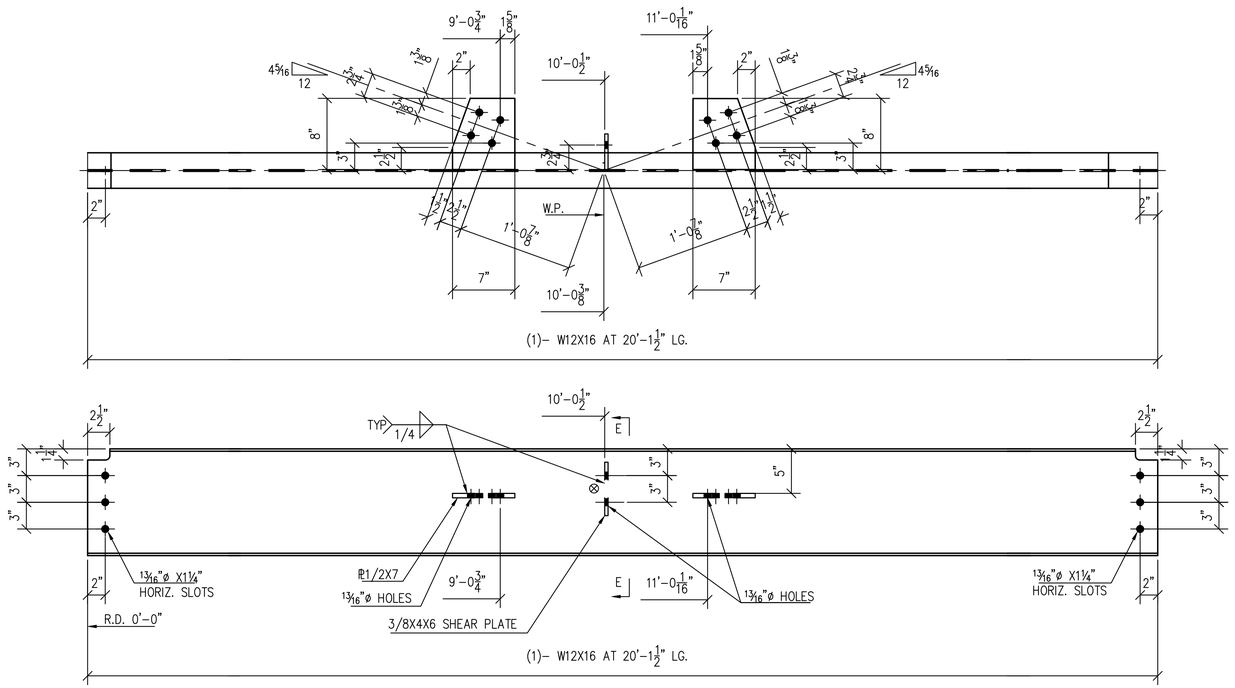

2NB30
(1 REQ.)

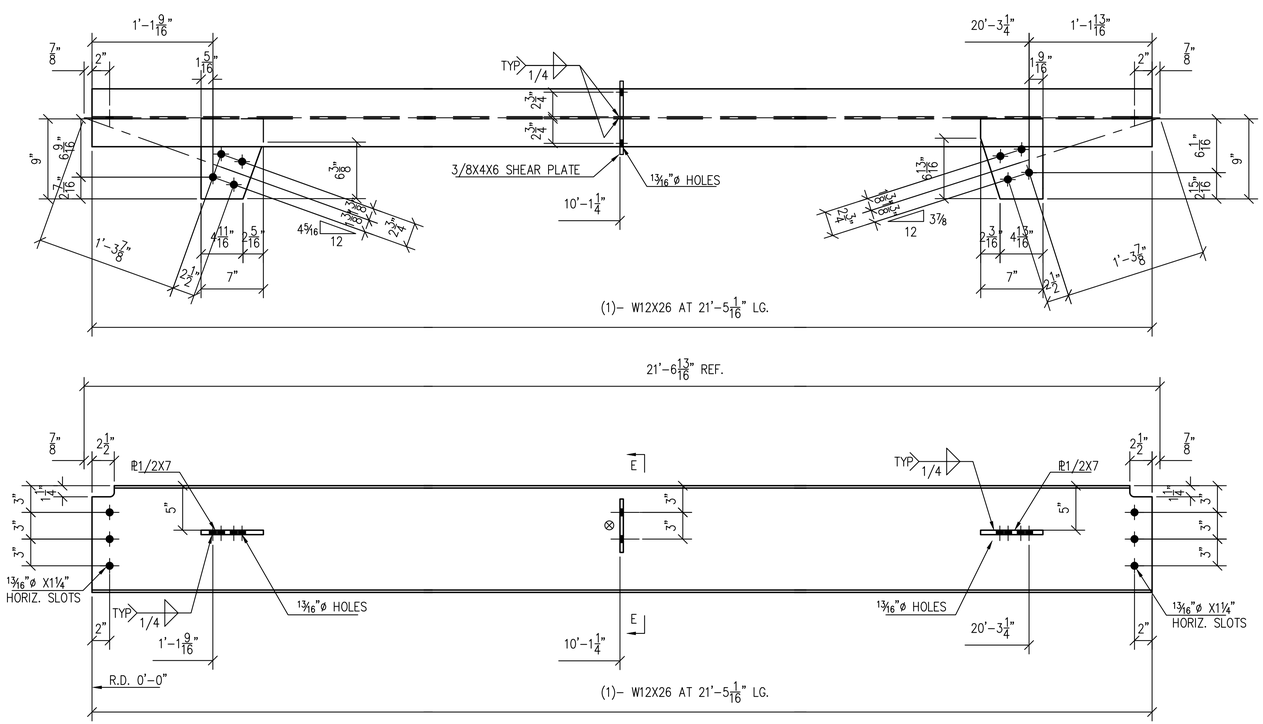

2NB31
(1 REQ.)

BILL OF MATERIALS					
REQ.	PC. MARK	SHAPE	LENGTH		REMARKS
1	2NB30	W12X16	20'	1 1/2"	–
1	pc11	PL3/8X4	0'	6"	–
2	pa22	PL1/2X7	0'	8"	
1	2NB31	W12X26	21'	5 1/16"	–
2	pc11	PL3/8X4	0'	6"	–
1	pb22	PL1/2X7	0'	9"	
1	pc22	PL1/2X7	0'	9"	

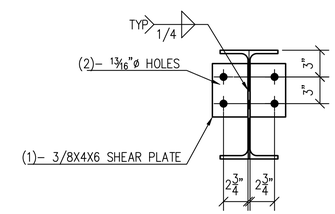

SECTION E-E

FOR FAB. & ERECTION:
4/30/2020

NOTE:
STEEL TO BE AS FOLLOWS
1. WIDE FLANGE TO BE ASTM A992
2. CHANNELS, PLATES AND ANGLES TO BE ASTM A36
3. HSS TO BE ASTM A500 GRADE B

PLAN NORTH

THE FOLLOWING NOTES ARE AN INTEGRAL OF THIS DRAWING AND OUR CONTRACT:

1) THE G.C. IS TO RETURN ONE MARKED-UP COPY TO OUR OFFICE. We require review by both the architect and engineer.
2) If Architect/Engineer marks up drawing "REVISED" we will construe this action to mean we are in compliance with contract documents and, in fact, these drawings are "APPROVED" or "APPROVED AS NOTED" unless specifically stated otherwise.
3) These drawings are our interpretation of what is necessary to meet your specifications. It is most important, therefore, that they are checked by the G.C./Architect/Engineer against drawings provided by other trades to ensure proper installation to those surrounding materials.
4) This drawing is for the exclusive use of Hidden Steel.
5) Work areas must be free of all obstructions prior to steel installation date. This includes ducts, pipes, electrical work, and all other obstructions which prevent direct vertical lift of steel to its final location.
6) Should roof or slab penetrations be required, the G.C. is responsible for all roof or slab proction, penetrations and subsequent fire stopping, waterproofing, flashing, etc.
7) Location of holes, clips, cuts for other trades, if required by our contract, MUST be shown and or verified by others on this drawing when submitted for approval.
8) Do not scale this drawing.
9) New steel is shown as [———————]; existing steel is shown as [—— —— ——]

STEEL	PAINT	HOLES	BOLTS	ELECTRODES
SEE NOTE	HOT-DIP GALVANIZED	13/16"ø	3/4"ø A325 (U.N.O.)	E7018 (U.N.O.)

NO.	DATE	COMMENTS	NO.	DATE	ISSUED FOR
6	4/30/2020	STAIR – RELEASE FOR FABRICATION	1	4/30/2020	FOR FAB. & ERECTION
5	4/1/2020	PARTIAL RELEASE FOR FABRICATION	1	4/1/2020	FOR FAB. & ERECTION
4	3/31/2020	PARTIAL RELEASE FOR FABRICATION	1	3/31/2020	FOR FAB. & ERECTION
3	3/26/2020	PARTIAL RELEASE FOR FABRICATION	1	3/26/2020	FOR FAB. & ERECTION
2	3/24/2020	PARTIAL RELEASE FOR FABRICATION	1	3/24/2020	FOR FAB. & ERECTION
1	2/7/2020	REVISED PER DESIGN CHANGE	1	2/8/2020	APPROVAL
		FIRST ISSUE	1	11/8/2019	APPROVAL

REVISIONS — PRINT RECORD

DWG TITLE
ROOF DUNNAGE
FRAMING, STAIR, & GUARDRAILS

PROJECT NAME

ARCH'T –				DWG REF
ENG'R				DWG REF S-101.00 S-102.00
CONT'R			SUPER	
DRN BY TS/OC	CHK'D BY	JOB NO. 4550	SEARCH –	DWG NO. 2N
DATE 11/4/19	DATE			

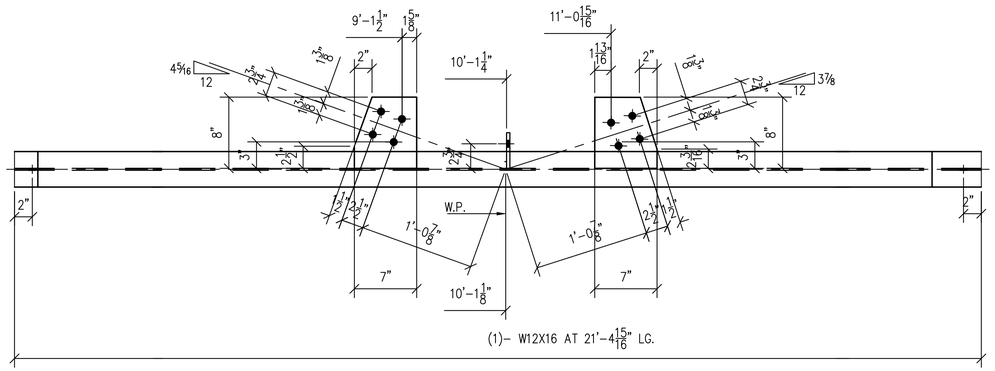

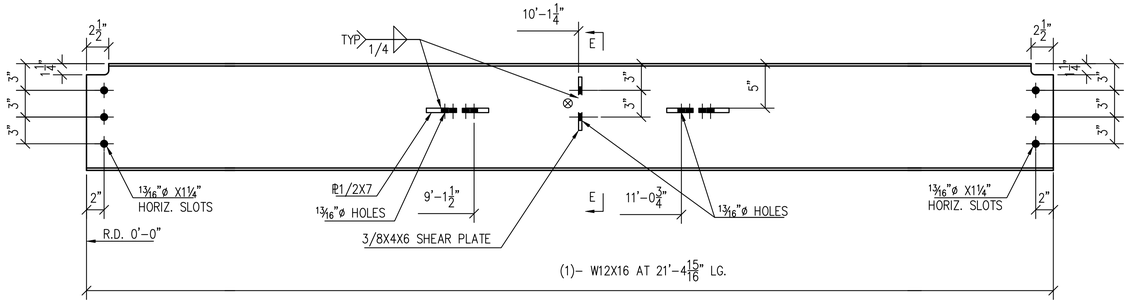

2PB32
(1 REQ.)

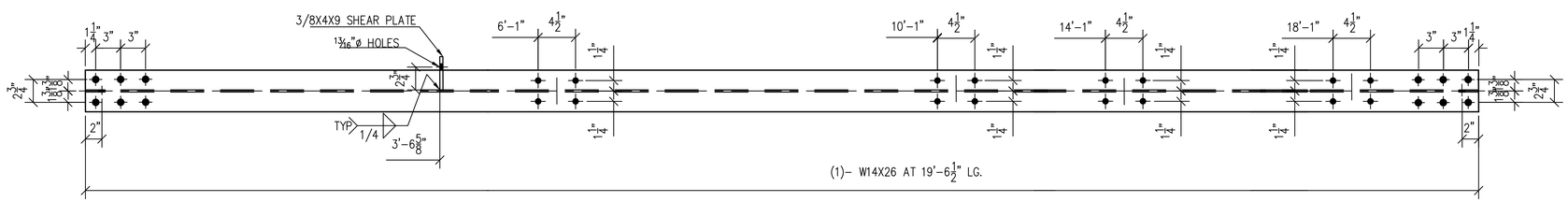

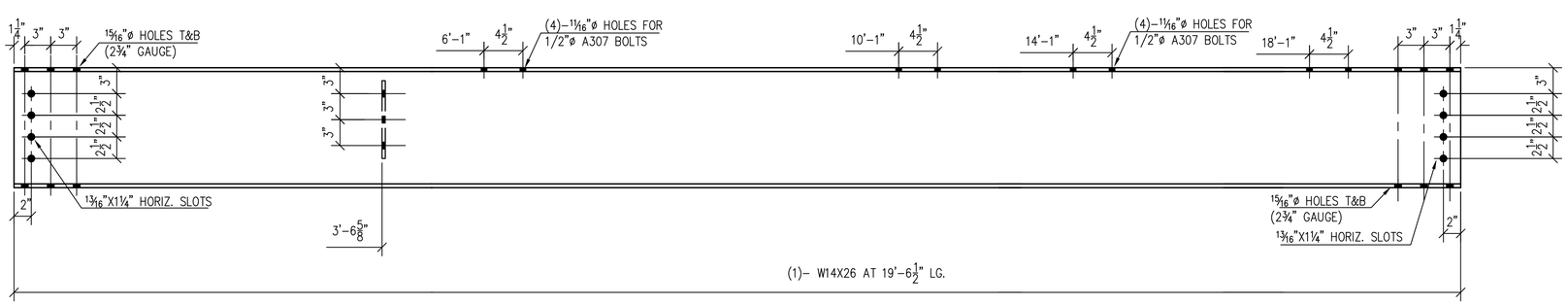

2PB33
(1 REQ.)

BILL OF MATERIALS					
REQ.	PC. MARK	SHAPE	LENGTH		REMARKS
1	2PB32	W12X16	20'	4 15/16"	–
1	pc11	PL3/8X4	0'	6"	–
2	pa23	PL1/2X7	0'	8"	
1	2PB33	W14X26	19'	6½"	–
1	pc19	PL3/8X4	0'	9"	–

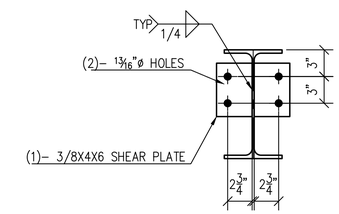

SECTION E-E

NOTE:
STEEL TO BE AS FOLLOWS
1. WIDE FLANGE TO BE ASTM A992
2. CHANNELS, PLATES AND ANGLES TO BE ASTM A36
3. HSS TO BE ASTM A500 GRADE B

FOR FAB. & ERECTION:
4/30/2020

PLAN NORTH

THE FOLLOWING NOTES ARE AN INTEGRAL OF THIS DRAWING AND OUR CONTRACT:

1) THE G.C. IS TO RETURN ONE MARKED-UP COPY TO OUR OFFICE. We require review by both the architect and engineer.
2) If Architect/Engineer marks up drawing "REVISE/E" we will construe this action to mean we are in compliance with contract documents and, in fact, these drawings are "APPROVED" or "APPROVED AS NOTED" unless specifically stated otherwise.
3) These drawings are our interpretation of what is necessary to meet your specifications. It is most important, therefore, that they are checked by the G.C./Architect/Engineer against drawings provided by other trades to ensure proper installation to those surrounding materials.
4) This drawing is for the exclusive use of Hallen Steel.
5) Work areas must be free of all obstructions prior to steel installation date. This includes ducts, pipes, electrical work, and all other obstructions which prevent direct vertical lift of steel to its final location.
6) Should roof or slab penetrations be required, the G.C. is responsible for all roof or slab protection, penetrations and subsequent fire stopping, waterproofing, flashing, etc.
7) Location of holes, clips, cuts for other trades, if required by our contract, MUST be shown and or verified by others on this drawing when submitted for approval.
8) Do not scale this drawing.
9) New steel is shown as [———————], existing steel is shown as [—— —— ——]

STEEL	PAINT	HOLES	BOLTS	ELECTRODES
SEE NOTE	HOT-DIP GALVANIZED	13/16"ø	3/4"ø A325 (U.N.O.)	E7018 (U.N.O.)

NO.	DATE	COMMENTS	NO.	DATE	ISSUED FOR
6	4/30/2020	STAIR – RELEASE FOR FABRICATION	1	4/30/2020	FOR FAB. & ERECTION
5	4/1/2020	PARTIAL RELEASE FOR FABRICATION	1	4/1/2020	FOR FAB. & ERECTION
4	3/30/2020	PARTIAL RELEASE FOR FABRICATION	1	3/31/2020	FOR FAB. & ERECTION
3	3/26/2020	PARTIAL RELEASE FOR FABRICATION	1	3/26/2020	FOR FAB. & ERECTION
2	3/24/2020	PARTIAL RELEASE FOR FABRICATION	1	3/24/2020	FOR FAB. & ERECTION
1	2/7/2020	REVISED PER DESIGN CHANGE	1	2/8/2020	APPROVAL
		FIRST ISSUE	1	11/8/2019	APPROVAL

REVISIONS — PRINT RECORD

DWG TITLE
ROOF DUNNAGE
FRAMING, STAIR, & GUARDRAILS

PROJECT NAME

ARCH'T –			DWG REF
ENG'R			DWG REF S-101.00 S-102.00
CONT'R		SUPER	
DRN BY TS/OC	CHK'D BY	JOB NO. 4550	SEARCH –	DWG NO. 2P
DATE 11/4/19	DATE			

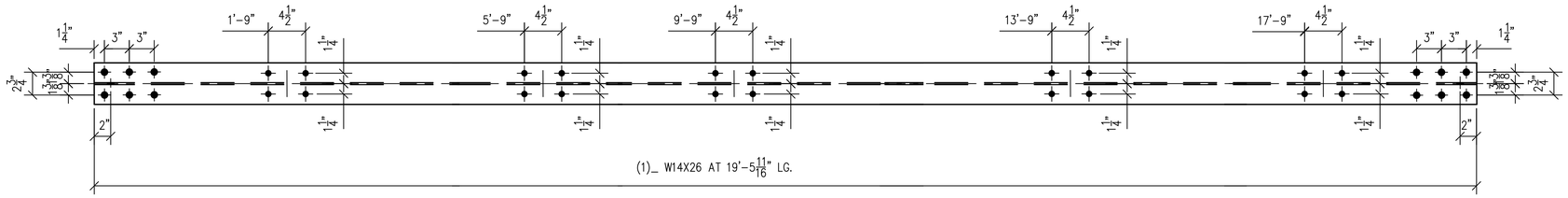

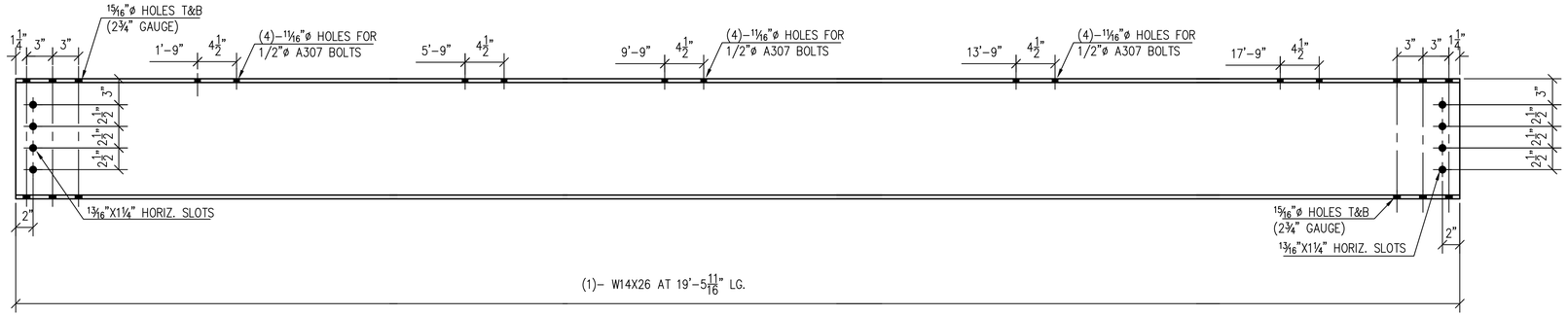

2RB34
(1 REQ.)

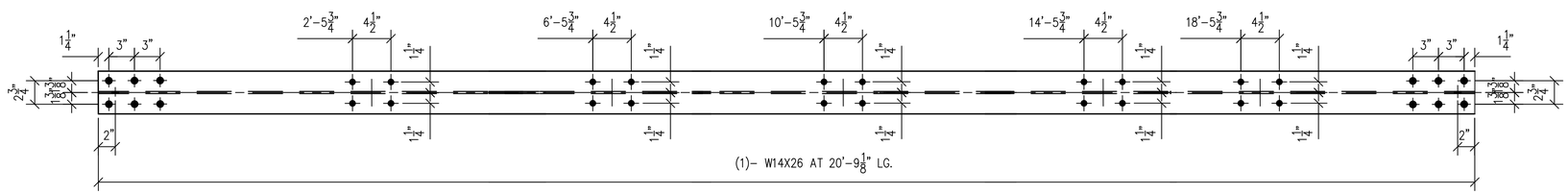

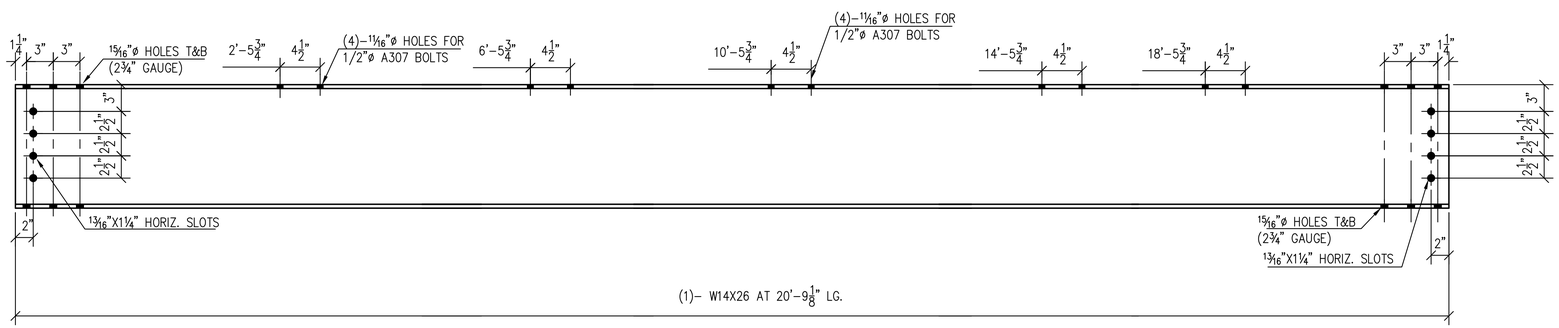

2RB35
(1 REQ.)

BILL OF MATERIALS					
REQ.	PC. MARK	SHAPE	LENGTH		REMARKS
1	2RB34	W14X26	19'	5 11/16"	–
1	2RB35	W14X26	20'	9⅛"	–

PLAN NORTH

THE FOLLOWING NOTES ARE AN INTEGRAL OF THIS DRAWING AND OUR CONTRACT:

1) THE G.C. IS TO RETURN ONE MARKED-UP COPY TO OUR OFFICE. We require review by both the architect and engineer.
2) If Architect/Engineer marks up drawing "REVIEWED" we will consider this action to mean we are in compliance with contract documents and, in fact, these drawings are "APPROVED" or "APPROVED AS NOTED" unless specifically stated otherwise.
3) These drawings are our interpretation of what is necessary to meet your specifications. It is most important, therefore, that they are checked by the G.C./Architect/Engineer against drawings provided by other trades to ensure proper installation to those surrounding materials.
4) This drawing is for the exclusive use of Hallen Steel.
5) Work areas must be free of all obstructions prior to steel installation date. This includes ducts, pipes, electrical work, and all other obstructions which prevent direct vertical lift of steel to its final location.
6) Should roof or slab penetrations be required, the G.C. is responsible for all roof or slab provision, penetrations and subsequent fire stopping, waterproofing, flashing, etc.
7) Location of holes, clips, cuts for other trades, if required by our contract, MUST be shown and or verified by others on this drawing when submitted for approval.
8) Do not scale this drawing.
9) New steel is shown as [————], existing steel is shown as [—— —— ——]

STEEL	PAINT	HOLES	BOLTS	ELECTRODES
SEE NOTE	HOT-DIP GALVANIZED	13/16"ø	3/4"ø A325 (U.N.O.)	E7018 (U.N.O.)

NO.	DATE	COMMENTS	NO.	DATE	ISSUED FOR
8	4/30/2020	STAIR – RELEASE FOR FABRICATION	1	4/30/2020	FOR FAB. & ERECTION
7	4/1/2020	PARTIAL RELEASE FOR FABRICATION	1	4/1/2020	FOR FAB. & ERECTION
6	3/30/2020	PARTIAL RELEASE FOR FABRICATION	1	3/31/2020	FOR FAB. & ERECTION
5	3/26/2020	PARTIAL RELEASE FOR FABRICATION	1	3/26/2020	FOR FAB. & ERECTION
4	3/24/2020	PARTIAL RELEASE FOR FABRICATION	1	3/24/2020	FOR FAB. & ERECTION
3	2/7/2020	REVISED PER DESIGN CHANGE	1	2/8/2020	APPROVAL
		FIRST ISSUE	1	11/8/2019	APPROVAL

REVISIONS — PRINT RECORD

FOR FAB. & ERECTION:
4/30/2020

DWG TITLE
ROOF DUNNAGE
FRAMING, STAIR, & GUARDRAILS

PROJECT NAME

ARCH'T –
DWG REF
ENG'R
DWG REF S-101.00 S-102.00
CONT'R
SUPER

DRN BY	CHK'D BY	JOB NO.	SEARCH	DWG NO.
TS/OC		4550	–	2R
DATE 11/4/19	DATE			

NOTE:
STEEL TO BE AS FOLLOWS
1. WIDE FLANGE TO BE ASTM A992
2. CHANNELS, PLATES AND ANGLES TO BE ASTM A36
3. HSS TO BE ASTM A500 GRADE B

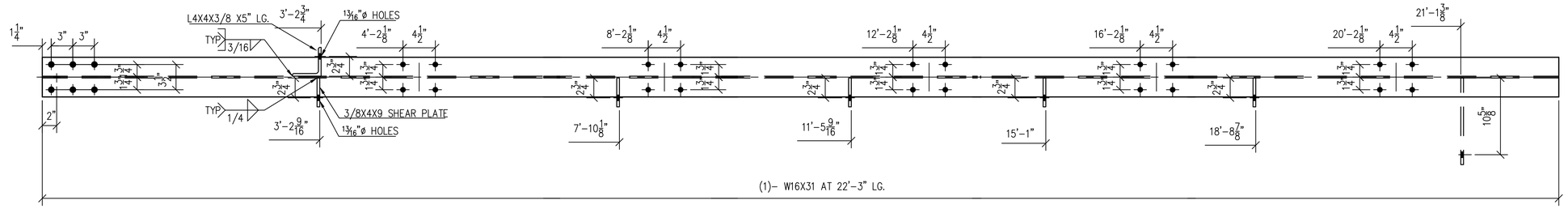

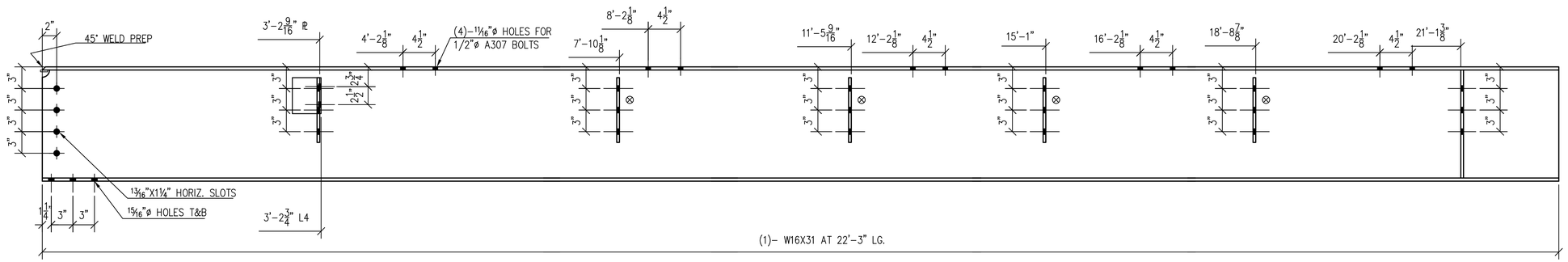

2SB36
(1 REQ.)

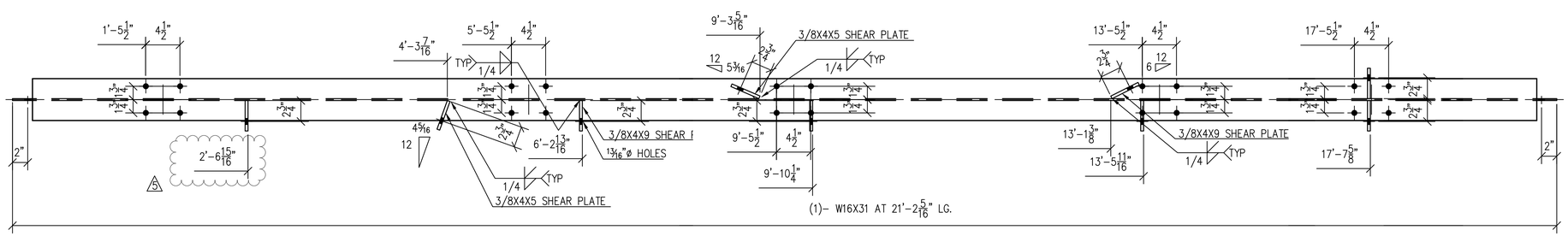

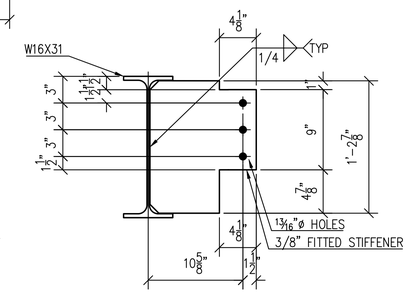

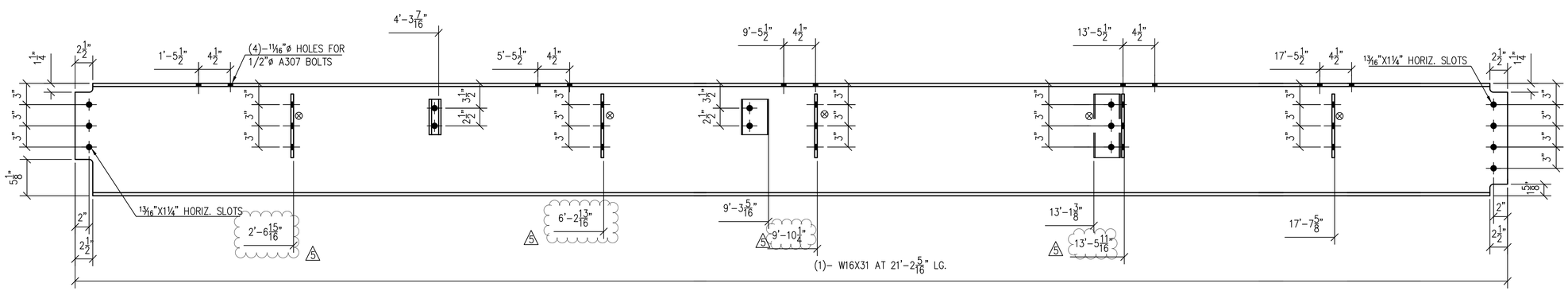

2SB37
(1 REQ.)

BILL OF MATERIALS					
REQ.	PC. MARK	SHAPE	LENGTH		REMARKS
1	2SB36	W16X31	22'	3"	–
5	pc19	PL3/8X4	0'	9"	–
1	pa25	PL3/8X1'–2⅞"	1'	0⅛"	–
1	aa25	L4X4X3/8	0'	5"	–
1	2SB37	W16X31	21'	2 5/16"	–
2	pb25	PL3/8X4	0'	5"	–
6	pc19	PL3/8X4	0'	9"	–

FOR FAB. & ERECTION:
4/30/2020

PLAN NORTH

THE FOLLOWING NOTES ARE AN INTEGRAL OF THIS DRAWING AND OUR CONTRACT:

1) THE G.C. IS TO RETURN ONE MARKED–UP COPY TO OUR OFFICE. We require review by both the architect and engineer.
2) If Architect/Engineer marks up drawing "REVISED" we will construe this action to mean we are in compliance with contract documents and, in fact, these drawings are "APPROVED" or "APPROVED AS NOTED" unless specifically stated otherwise.
3) These drawings are our interpretation of what is necessary to meet your specifications. It is most important, therefore, that they are checked by the G.C./Architect/Engineer against drawings provided by other trades to ensure proper installation to those surrounding materials.
4) This drawing is for the exclusive use of Hallen Steel.
5) Work areas must be free of all obstructions prior to steel installation date. This includes ducts, pipes, electrical work, and all other obstructions which prevent direct vertical lift of steel to its final location.
6) Should roof or slab penetrations be required, the G.C. is responsible for all roof or slab protection, penetrations and subsequent fire stopping, waterproofing, flashing, etc.
7) Location of holes, clips, cuts for other trades, if required by our contract, MUST be shown and or verified by others on this drawing when submitted for approval.
8) Do not scale this drawing.
9) New steel is shown as ├──────┤; existing steel is shown as [── ── ──]

STEEL	PAINT	HOLES	BOLTS	ELECTRODES
SEE NOTE	HOT–DIP GALVANIZED	13/16"ø	3/4"ø A325 (U.N.O.)	E7018 (U.N.O.)

NO.	DATE	COMMENTS	NO.	DATE	ISSUED FOR
5	4/30/2020	STAIR – RELEASE FOR FABRICATION	1	4/30/2020	FOR FAB. & ERECTION
4	4/1/2020	PARTIAL RELEASE FOR FABRICATION	1	4/1/2020	FOR FAB. & ERECTION
3	3/30/2020	PARTIAL RELEASE FOR FABRICATION	1	3/31/2020	FOR FAB. & ERECTION
2	3/26/2020	PARTIAL RELEASE FOR FABRICATION	1	3/26/2020	FOR FAB. & ERECTION
1	3/24/2020	PARTIAL RELEASE FOR FABRICATION	1	3/24/2020	FOR FAB. & ERECTION
1	2/7/2020	REVISED PER DESIGN CHANGE	1	2/8/2020	APPROVAL
		FIRST ISSUE	1	11/8/2019	APPROVAL

REVISIONS — PRINT RECORD

DWG TITLE
ROOF DUNNAGE
FRAMING, STAIR, & GUARDRAILS

PROJECT NAME

NOTE:
STEEL TO BE AS FOLLOWS
1. WIDE FLANGE TO BE ASTM A992
2. CHANNELS, PLATES AND ANGLES TO BE ASTM A36
3. HSS TO BE ASTM A500 GRADE B

ARCH'T –	DWG REF
ENG'R	DWG REF S–101.00 S–102.00
CONT'R	SUPER

DRN. BY	CHK'D BY	JOB NO.	SEARCH	DWG NO.
TS/OC		4550	–	2S
DATE 11/4/19	DATE			

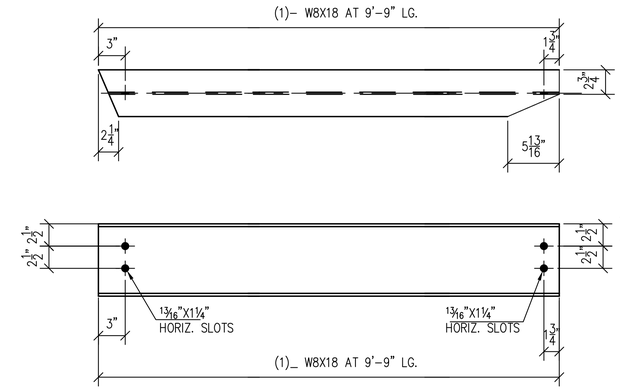

2TB38
(1 REQ.)

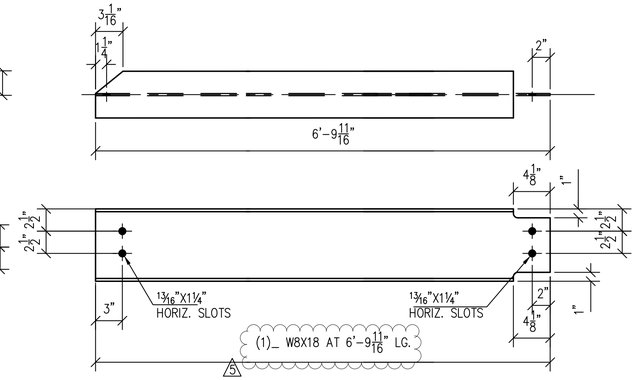

2TB39
(1 REQ.)

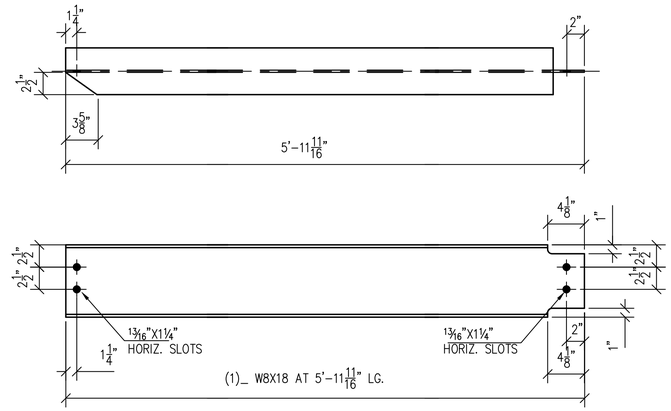

2TB40
(1 REQ.)

BILL OF MATERIALS					
REQ.	PC. MARK	SHAPE	LENGTH		REMARKS
1	2TB38	W8X18	9'	9"	–
1	2TB39	W8X18	6'	9 11/16"	–
1	2TB40	W8X18	5'	11 11/16"	–
1	2TB41	W8X18	4'	11 11/16"	–
1	pa26	PL3/8X6	0'	9"	–
1	pb26	PL1/2X6	0'	6"	–
1	2TB42	W8X18	7'	7 5/16"	–
2	pa26	PL3/8X6	0'	9"	–
2	pb26	PL1/2X6	0'	6"	–
1	2TB43	W8X18	7'	6"	–
2	pa26	PL3/8X6	0'	9"	–
2	pb26	PL1/2X6	0'	6"	–

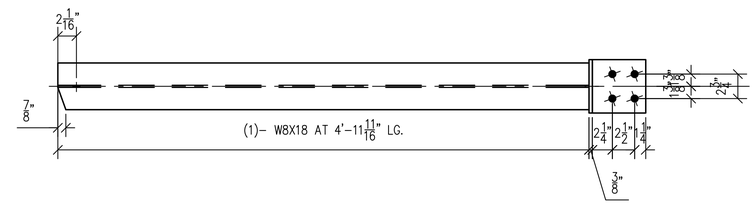

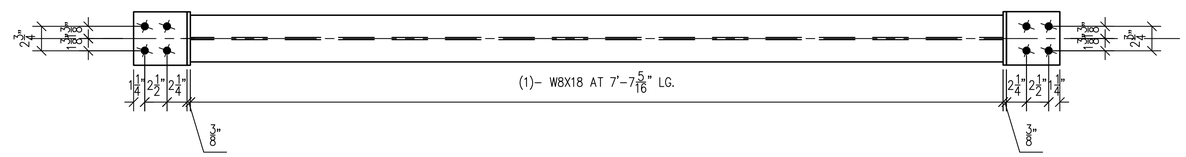

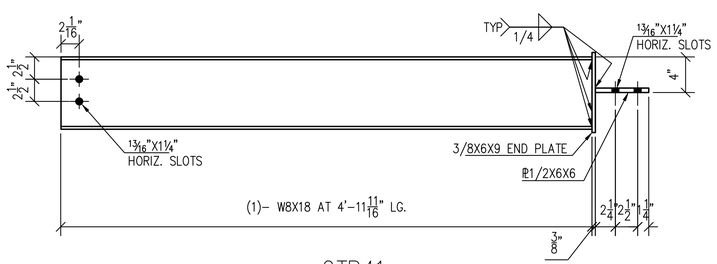

2TB41
(1 REQ.)

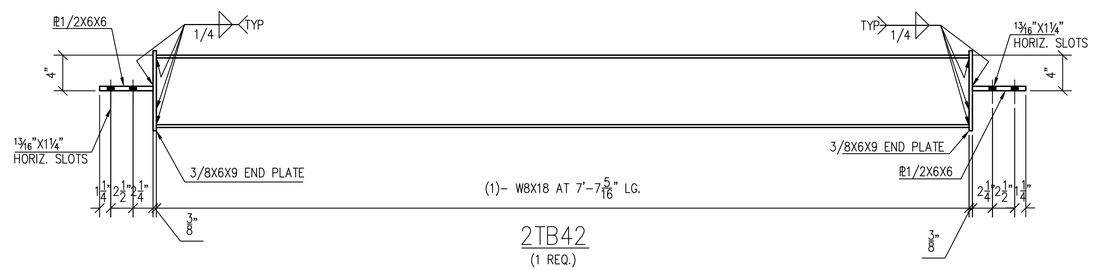

2TB42
(1 REQ.)

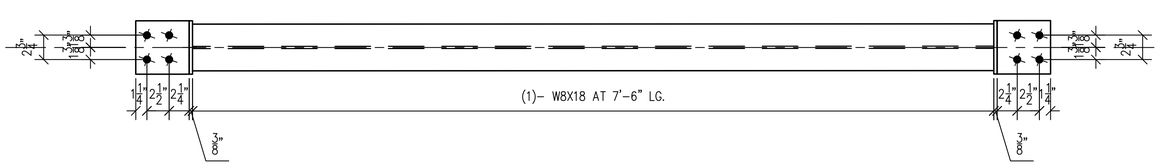

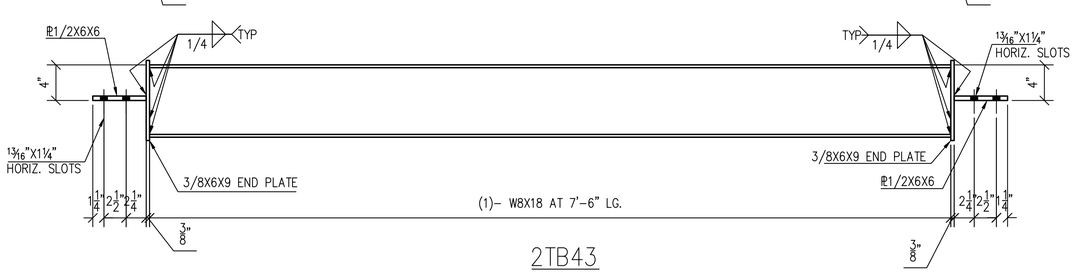

2TB43
(1 REQ.)

NOTE:
STEEL TO BE AS FOLLOWS
1. WIDE FLANGE TO BE ASTM A992
2. CHANNELS, PLATES AND ANGLES TO BE ASTM A36
3. HSS TO BE ASTM A500 GRADE B

FOR FAB. & ERECTION:
4/30/2020

PLAN NORTH

THE FOLLOWING NOTES ARE AN INTEGRAL OF THIS DRAWING AND OUR CONTRACT:

1) THE G.C. IS TO RETURN ONE MARKED-UP COPY TO OUR OFFICE. We require review by both the architect and engineer.
2) If Architect/Engineer marks up drawing "REVISE/EC" we will construe this action to mean we are in compliance with contract documents and, in fact, these drawings are "APPROVED" or "APPROVED AS NOTED" unless specifically stated otherwise.
3) These drawings are our interpretation of what is necessary to meet your specifications. It is most important, therefore, that they are checked by the G.C./Architect/Engineer against drawings provided by other trades to ensure proper installation to those surrounding materials.
4) This drawing is for the exclusive use of Holden Steel.
5) Work areas must be free of all obstructions prior to steel installation date. This includes ducts, pipes, electrical work, and all other obstructions which prevent direct vertical lift of steel to its final location.
6) Should roof or slab penetrations be required, the G.C. is responsible for all roof or slab provision, penetrations and subsequent fire stopping, waterproofing, flashing, etc.
7) Location of holes, clips, cuts for other trades, if required by our contract, MUST be shown and or verified by others on this drawing when submitted for approval.
8) Do not scale this drawing.
9) New steel is shown as [———————], existing steel is shown as [—— —— ——]

STEEL	PAINT	HOLES	BOLTS	ELECTRODES
SEE NOTE	HOT-DIP GALVANIZED	13/16"ø	3/4"ø A325 (U.N.O.)	E7018 (U.N.O.)

NO.	DATE	COMMENTS	NO.	DATE	ISSUED FOR
6	4/30/2020	STAIR – RELEASE FOR FABRICATION	1	4/30/2020	FOR FAB. & ERECTION
5	4/1/2020	PARTIAL RELEASE FOR FABRICATION	1	4/1/2020	FOR FAB. & ERECTION
4	3/30/2020	PARTIAL RELEASE FOR FABRICATION	1	3/31/2020	FOR FAB. & ERECTION
3	3/26/2020	PARTIAL RELEASE FOR FABRICATION	1	3/26/2020	FOR FAB. & ERECTION
2	3/24/2020	PARTIAL RELEASE FOR FABRICATION	1	3/24/2020	FOR FAB. & ERECTION
1	2/7/2020	REVISED PER DESIGN CHANGE	1	2/8/2020	APPROVAL
		FIRST ISSUE	1	11/8/2019	APPROVAL

REVISIONS — PRINT RECORD

DWG TITLE
ROOF DUNNAGE
FRAMING, STAIR, & GUARDRAILS

PROJECT NAME

ARCH'T –			DWG REF
ENG'R			DWG REF S-101.00 S-102.00
CONT'R		SUPER	
DRN BY TS/OC	CHK'D BY	JOB NO. 4550	SEARCH –	DWG NO. 2T
DATE 11/4/19	DATE			

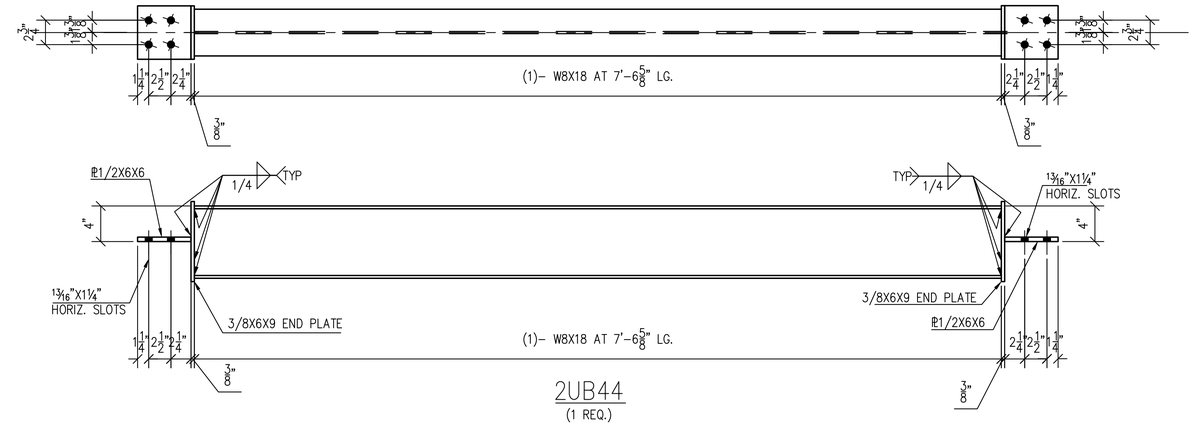

2UB44
(1 REQ.)

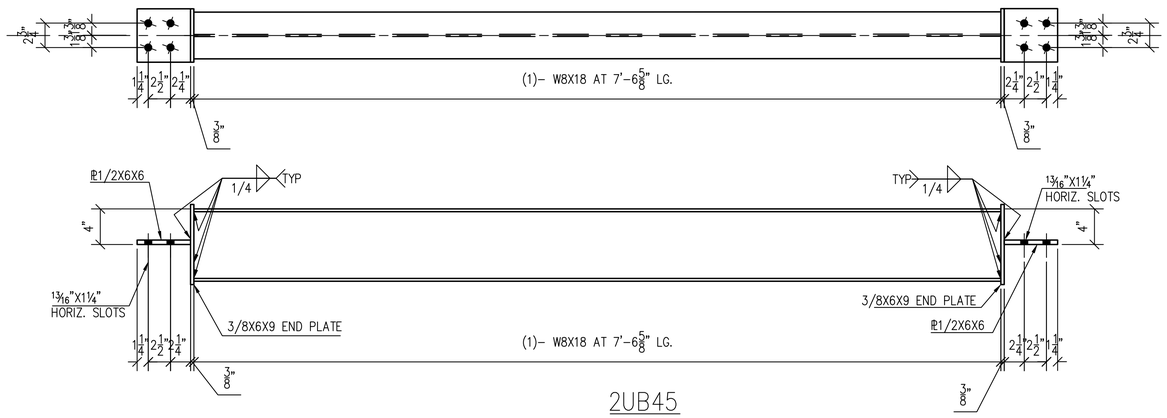

2UB45
(1 REQ.)

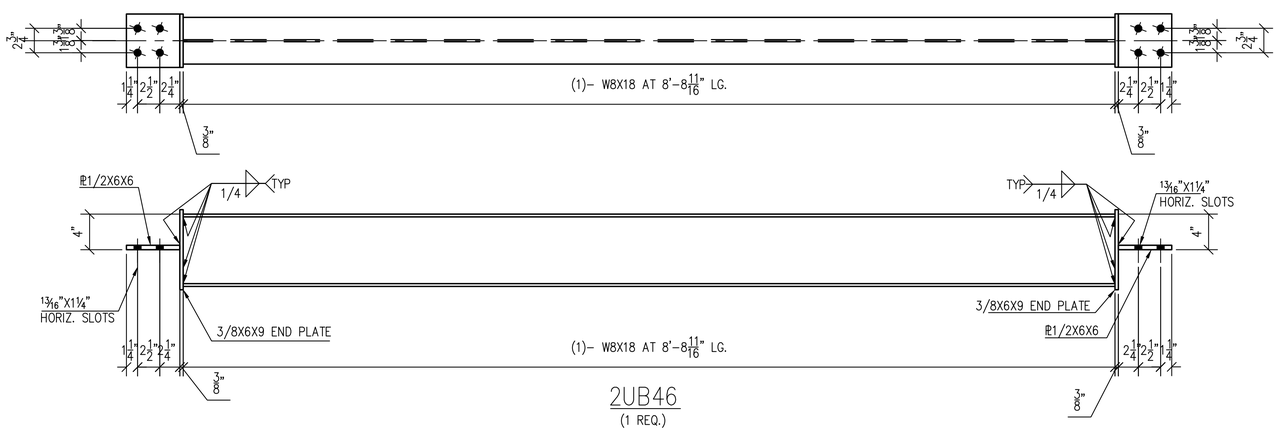

2UB46
(1 REQ.)

BILL OF MATERIALS

REQ.	PC. MARK	SHAPE	LENGTH		REMARKS
1	2UB44	W8X18	7'	6 5/8"	–
2	pa26	PL3/8X6	0'	9"	–
2	pb26	PL1/2X6	0'	6"	–
1	2UB45	W8X18	7'	6 5/8"	–
2	pa26	PL3/8X6	0'	9"	–
2	pb26	PL1/2X6	0'	6"	–
1	2UB46	W8X18	8'	8 11/16"	–
2	pa26	PL3/8X6	0'	9"	–
2	pb26	PL1/2X6	0'	6"	–

FOR FAB. & ERECTION:
4/30/2020

PLAN NORTH

THE FOLLOWING NOTES ARE AN INTEGRAL OF THIS DRAWING AND OUR CONTRACT:

1) THE G.C. IS TO RETURN ONE MARKED-UP COPY TO OUR OFFICE. We require review by both the architect and engineer.
2) If Architect/Engineer marks up drawing "REVIEWED" we will construe this action to mean we are in compliance with contract documents and, in fact, these drawings are "APPROVED" or "APPROVED AS NOTED" unless specifically stated otherwise.
3) These drawings are our interpretation of what is necessary to meet your specifications. It is most important, therefore, that they are checked by the G.C./Architect/Engineer against drawings provided by other trades to ensure proper installation to those surrounding materials.
4) This drawing is for the exclusive use of Hallen Steel.
5) Work areas must be free of all obstructions prior to steel installation date. This includes ducts, pipes, electrical work, and all other obstructions which prevent direct vertical lift of steel to its final location.
6) Should roof or slab penetrations be required, the G.C. is responsible for all roof or slab procedure, penetrations and subsequent fire stopping, waterproofing, flashing, etc.
7) Location of holes, clips, cuts for other trades, if required by our contract, MUST be shown and or verified by others on this drawing when submitted for approval.
8) Do not scale this drawing.
9) New steel is shown as [———], existing steel is shown as [— — —]

STEEL	PAINT	HOLES	BOLTS	ELECTRODES
SEE NOTE	HOT–DIP GALVANIZED	13/16"ø	3/4"ø A325 (U.N.O.)	E7018 (U.N.O.)

NO.	DATE	COMMENTS	NO.	DATE	ISSUED FOR
8	4/30/2020	STAIR – RELEASE FOR FABRICATION	1	4/30/2020	FOR FAB. & ERECTION
7	4/1/2020	PARTIAL RELEASE FOR FABRICATION	1	4/1/2020	FOR FAB. & ERECTION
6	3/30/2020	PARTIAL RELEASE FOR FABRICATION	1	3/31/2020	FOR FAB. & ERECTION
5	3/26/2020	PARTIAL RELEASE FOR FABRICATION	1	3/26/2020	FOR FAB. & ERECTION
4	3/24/2020	PARTIAL RELEASE FOR FABRICATION	1	3/24/2020	FOR FAB. & ERECTION
3	2/7/2020	REVISED PER DESIGN CHANGE	1	2/8/2020	APPROVAL
		FIRST ISSUE	1	11/8/2019	APPROVAL

REVISIONS — PRINT RECORD

DWG TITLE
ROOF DUNNAGE
FRAMING, STAIR, & GUARDRAILS

PROJECT NAME

NOTE:
STEEL TO BE AS FOLLOWS
1. WIDE FLANGE TO BE ASTM A992
2. CHANNELS, PLATES AND ANGLES TO BE ASTM A36
3. HSS TO BE ASTM A500 GRADE B

ARCH'T –				DWG REF
ENG'R				DWG REF S–101.00 S–102.00
CONT'R			SUPER	
DRN BY TS/OC	CHK'D BY	JOB NO. 4550	SEARCH –	DWG NO. 2U
DATE 11/4/19	DATE			

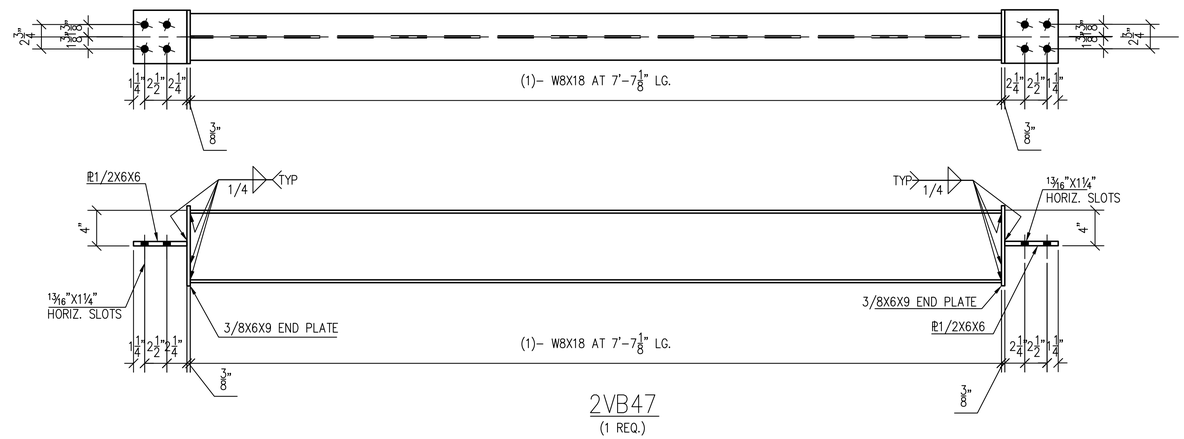

2VB47
(1 REQ.)

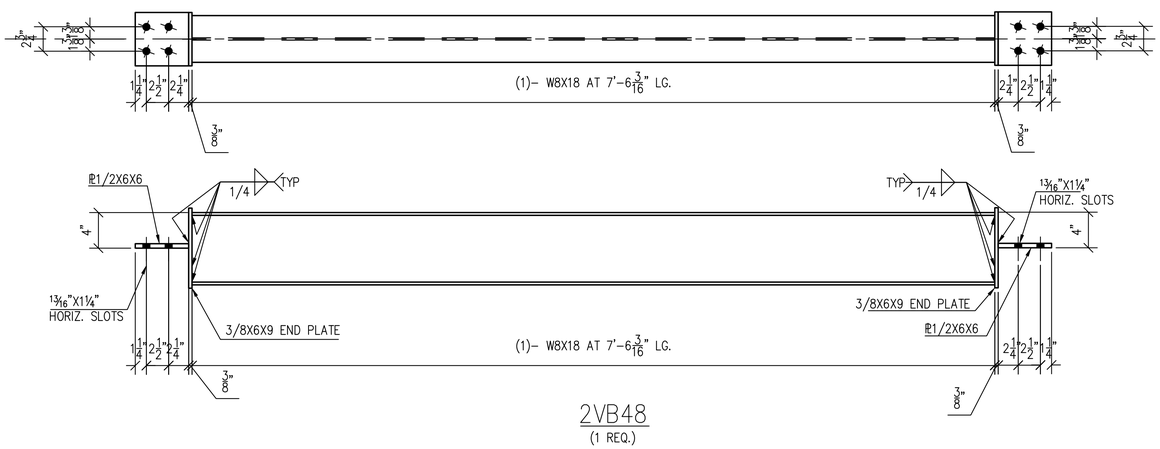

2VB48
(1 REQ.)

2VB49
(1 REQ.)

BILL OF MATERIALS

REQ.	PC. MARK	SHAPE	LENGTH		REMARKS
1	2VB47	W8X18	7'	7 1/8"	–
2	pa26	PL3/8X6	0'	9"	–
2	pb26	PL1/2X6	0'	6"	–
1	2VB48	W8X18	7'	6 3/16"	–
2	pa26	PL3/8X6	0'	9"	–
2	pb26	PL1/2X6	0'	6"	–
1	2VB49	W8X18	7'	6 5/8"	–
2	pa26	PL3/8X6	0'	9"	–
2	pb26	PL1/2X6	0'	6"	–

FOR FAB. & ERECTION:
4/30/2020

PLAN NORTH

THE FOLLOWING NOTES ARE AN INTEGRAL OF THIS DRAWING AND OUR CONTRACT:

1) THE G.C. IS TO RETURN ONE MARKED-UP COPY TO OUR OFFICE. We require review by both the architect and engineer.
2) If Architect/Engineer marks up drawing "REVISE/ET" we will construe this action to mean we are in compliance with contract documents and, in fact, these drawings are "APPROVED" or "APPROVED AS NOTED" unless specifically stated otherwise.
3) These drawings are our interpretation of what is necessary to meet your specifications. It is most important, therefore, that they are checked by the G.C./Architect/Engineer against drawings provided by other trades to ensure proper installation to those surrounding materials.
4) This drawing is for fire exclusive use of Hallen Steel.
5) Work areas must be free of all obstructions prior to steel installation date. This includes ducts, pipes, electrical work, and all other obstructions which prevent direct vertical lift of steel to its final location.
6) Should roof or slab penetrations be required, the G.C. is responsible for all roof or slab protection, penetrations and subsequent fire stopping, waterproofing, flashing, etc.
7) Location of holes, clips, cuts for other trades, if required by our contract, MUST be shown and or verified by others on this drawing when submitted for approval.
8) Do not scale this drawing.
9) New steel is shown as [————————], existing steel is shown as [—— —— ——]

STEEL	PAINT	HOLES	BOLTS	ELECTRODES
SEE NOTE	HOT–DIP GALVANIZED	13/16"ø	3/4"ø A325 (U.N.O.)	E7018 (U.N.O.)

NO.	DATE	COMMENTS	NO.	DATE	ISSUED FOR
6	4/30/2020	STAIR – RELEASE FOR FABRICATION	1	4/30/2020	FOR FAB. & ERECTION
5	4/1/2020	PARTIAL RELEASE FOR FABRICATION	1	4/1/2020	FOR FAB. & ERECTION
4	3/30/2020	PARTIAL RELEASE FOR FABRICATION	1	3/31/2020	FOR FAB. & ERECTION
3	3/26/2020	PARTIAL RELEASE FOR FABRICATION	1	3/26/2020	FOR FAB. & ERECTION
2	3/24/2020	PARTIAL RELEASE FOR FABRICATION	1	3/24/2020	FOR FAB. & ERECTION
1	2/7/2020	REVISED PER DESIGN CHANGE	1	2/8/2020	APPROVAL
		FIRST ISSUE	1	11/6/2019	APPROVAL

REVISIONS — PRINT RECORD

DWG TITLE
ROOF DUNNAGE
FRAMING, STAIR, & GUARDRAILS

PROJECT NAME

ARCH'T –			DWG REF
ENG'R			DWG REF S–101.00 S–102.00
CONT'R		SUPER	
DRN BY TS/OC	CHK'D BY	JOB NO. 4550	SEARCH –	DWG NO. 2V
DATE 11/4/19	DATE			

NOTE:
STEEL TO BE AS FOLLOWS
1. WIDE FLANGE TO BE ASTM A992
2. CHANNELS, PLATES AND ANGLES TO BE ASTM A36
3. HSS TO BE ASTM A500 GRADE B

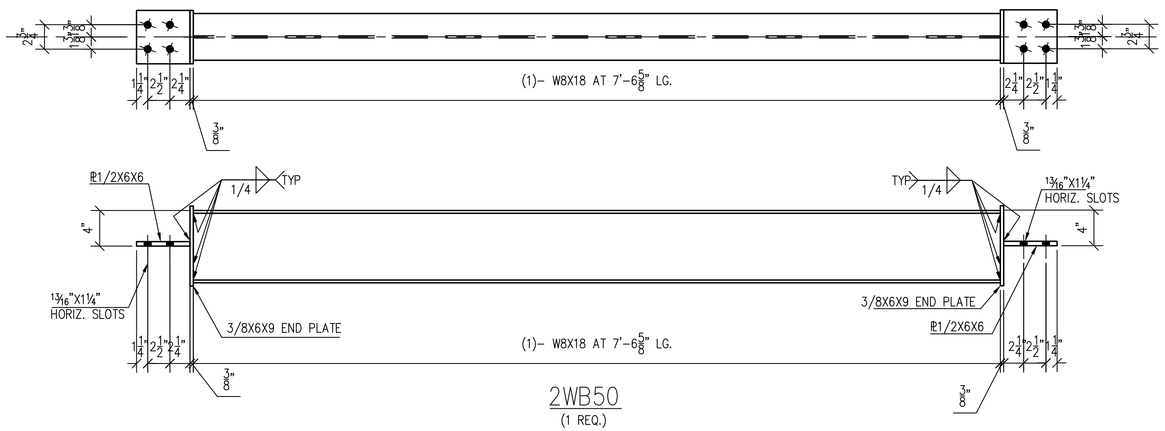

2WB50
(1 REQ.)

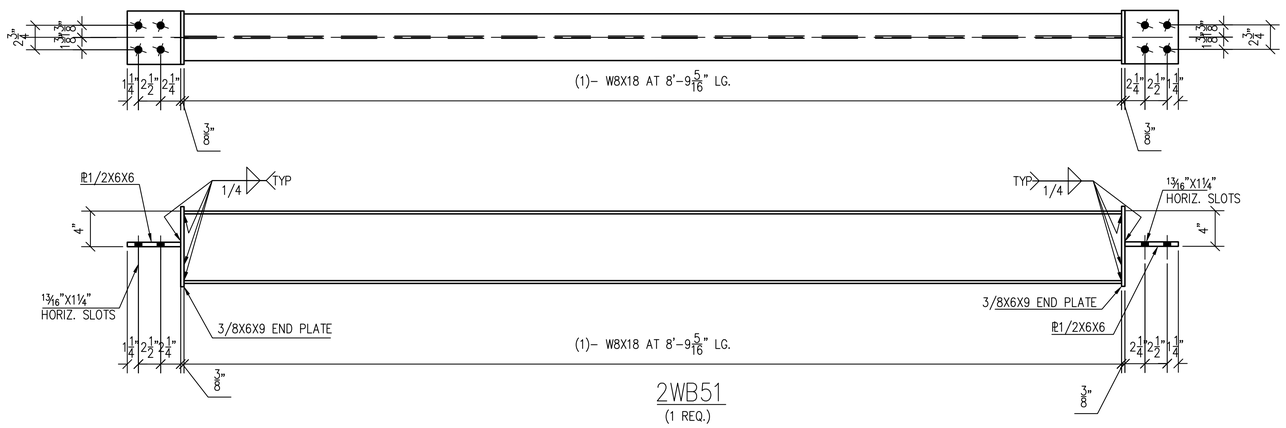

2WB51
(1 REQ.)

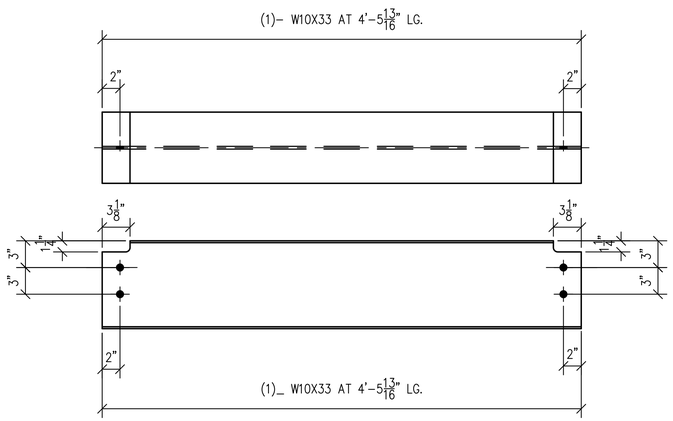

2WB54
(2 REQ.)

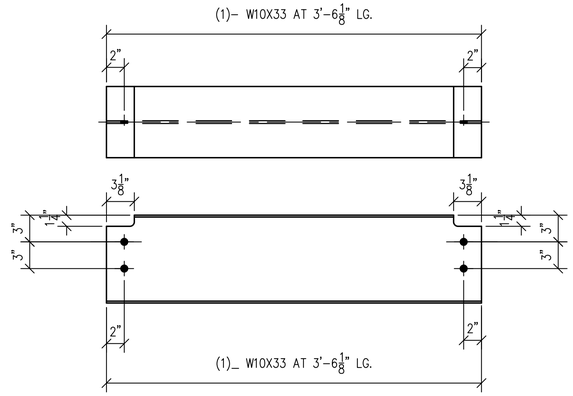

2WB52
(2 REQ.)

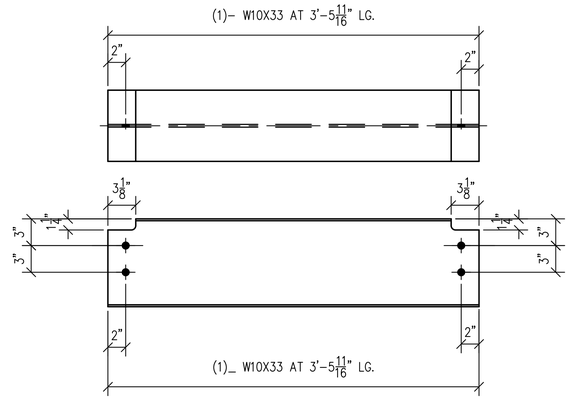

2WB53
(4 REQ.)

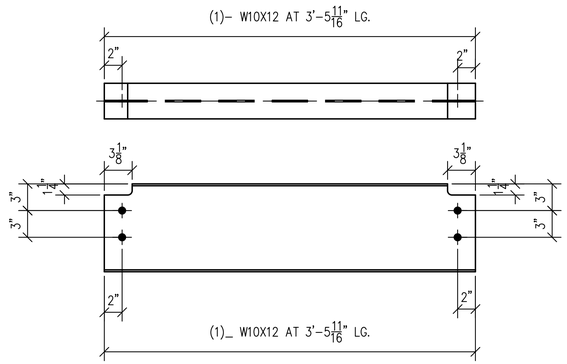

2WB55
(16 REQ.)

BILL OF MATERIALS

REQ.	PC. MARK	SHAPE	LENGTH		REMARKS
1	2WB50	W8X18	7'	6 5/8"	–
2	pa26	PL3/8X6	0'	9"	–
2	pb26	PL1/2X6	0'	6"	–
1	2WB51	W8X18	8'	9 5/16"	–
2	pa26	PL3/8X6	0'	9"	–
2	pb26	PL1/2X6	0'	6"	–
2	2WB52	W10X33	3'	6 1/8"	–
4	2WB53	W10X33	3'	5 11/16"	–
2	2WB54	W10X33	4'	5 3/16"	–
16	2WB55	W10X12	3'	5 11/16"	–

FOR FAB. & ERECTION:
4/30/2020

PLAN NORTH

THE FOLLOWING NOTES ARE AN INTEGRAL OF THIS DRAWING AND OUR CONTRACT:

1) THE G.C. IS TO RETURN ONE MARKED-UP COPY TO OUR OFFICE. We require review by both the architect and engineer.
2) If Architect/Engineer marks up drawing "REVISED" we will construe this action to mean we are in compliance with contract documents and, in fact, these drawings are "APPROVED" or "APPROVED AS NOTED" unless specifically stated otherwise.
3) These drawings are our interpretation of what is necessary to meet your specifications. It is most important, therefore, that they are checked by the G.C./Architect/Engineer against drawings provided by other trades to ensure proper installation to those surrounding materials.
4) This drawing is for the exclusive use of Hallen Steel.
5) Work areas must be free of all obstructions prior to steel installation date. This includes ducts, pipes, electrical work, and all other obstructions which prevent direct vertical lift of steel to its final location.
6) Should roof or slab penetrations be required, the G.C. is responsible for all roof or slab provision, penetrations and subsequent fire stopping, waterproofing, flashing, etc.
7) Location of holes, clips, cuts for other trades, if required by our contract, MUST be shown and or verified by others on this drawing when submitted for approval.
8) Do not scale this drawing.
9) New steel is shown as [———] existing steel is shown as [— — —]

STEEL	PAINT	HOLES	BOLTS	ELECTRODES
SEE NOTE	HOT-DIP GALVANIZED	13/16"ø	3/4"ø A325 (U.N.O.)	E7018 (U.N.O.)

NO.	DATE	COMMENTS	NO.	DATE	ISSUED FOR
4	4/30/2020	STAIR – RELEASE FOR FABRICATION	1	4/30/2020	FOR FAB. & ERECTION
3	4/1/2020	PARTIAL RELEASE FOR FABRICATION	1	4/1/2020	FOR FAB. & ERECTION
2	3/30/2020	PARTIAL RELEASE FOR FABRICATION	1	3/31/2020	FOR FAB. & ERECTION
1	3/26/2020	PARTIAL RELEASE FOR FABRICATION	1	3/26/2020	FOR FAB. & ERECTION
0	3/24/2020	PARTIAL RELEASE FOR FABRICATION	1	3/24/2020	FOR FAB. & ERECTION
1	2/7/2020	REVISED PER DESIGN CHANGE	1	2/8/2020	APPROVAL
		FIRST ISSUE	1	11/8/2019	APPROVAL

REVISIONS — PRINT RECORD

DWG TITLE
ROOF DUNNAGE
FRAMING, STAIR, & GUARDRAILS

PROJECT NAME

ARCH'T –
ENG'R
CONT'R
SUPER

DWG REF
DWG REF S–101.00 S–102.00

DRN BY	CHK'D BY	JOB NO.	SEARCH	DWG NO.
TS/OC		4550	–	2W
DATE 11/4/19	DATE			

NOTE:
STEEL TO BE AS FOLLOWS
1. WIDE FLANGE TO BE ASTM A992
2. CHANNELS, PLATES AND ANGLES TO BE ASTM A36
3. HSS TO BE ASTM A500 GRADE B

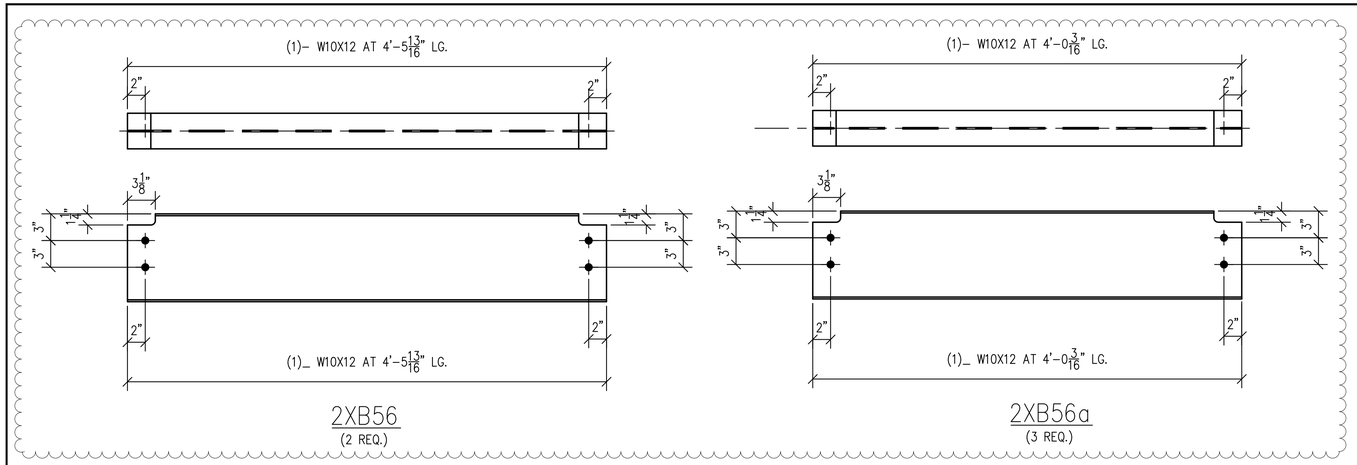

5

BILL OF MATERIALS					
REQ.	PC. MARK	SHAPE	LENGTH		REMARKS
2	2XB56	W10X12	4'	5 13/16"	–
3	2XB57	W10X12	3'	5 1/8"	–
1	2XB58	W16X31	20'	8 1/2"	–
10	pc19	PL3/8X4	0'	9"	–
3	2XB56a	W10X12	4'	0 3/16"	–

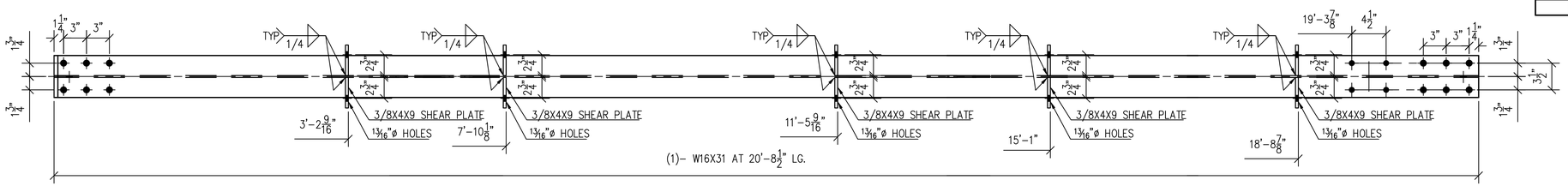

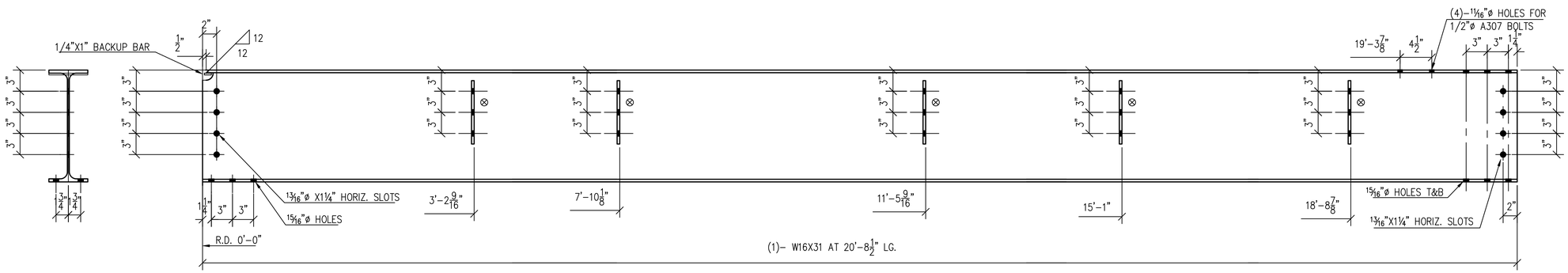

2XB58
(1 REQ.)

FOR FAB. & ERECTION:
4/30/2020

PLAN NORTH

THE FOLLOWING NOTES ARE AN INTEGRAL OF THIS DRAWING AND OUR CONTRACT:

1) WE E.C. TO RETURN ONE MARKED-UP COPY TO OUR OFFICE. We require review by both the architect and engineer.
2) If Architect/Engineer marks up drawing "REVIEWED" we will consider this action to mean we are in compliance with contract documents and, in fact, these drawings are "APPROVED" or "APPROVED AS NOTED" unless specifically stated otherwise.
3) These drawings are our interpretation of what is necessary to meet your specifications. It is most important, therefore, that they are checked by the G.C./Architect/Engineer against drawings provided by other trades to ensure proper installation to those surrounding materials.
4) This drawing is for the exclusive use of Hallen Steel.
5) Work areas must be free of all obstructions prior to steel installation date. This includes ducts, pipes, electrical work, and all other obstructions which prevent direct vertical lift of steel to its final location.
6) Should roof or slab penetrations be required, the G.C. is responsible for all roof or slab provision, penetrations and subsequent fire stopping, waterproofing, flashing, etc.
7) Location of holes, clips, cuts for other trades, if required by our contract, MUST be shown and or verified by others on this drawing when submitted for approval.
8) Do not scale this drawing.
9) New steel is shown as [———————], existing steel is shown as [—— —— ——]

STEEL	PAINT	HOLES	BOLTS	ELECTRODES
SEE NOTE	HOT–DIP GALVANIZED	13/16"ø	3/4"ø A325 (U.N.O.)	E7018 (U.N.O.)

NO.	DATE	COMMENTS	NO.	DATE	ISSUED FOR
6	4/30/2020	STAIR – RELEASE FOR FABRICATION	1	4/30/2020	FOR FAB. & ERECTION
5	4/1/2020	PARTIAL RELEASE FOR FABRICATION	1	4/1/2020	FOR FAB. & ERECTION
4	3/30/2020	PARTIAL RELEASE FOR FABRICATION	1	3/31/2020	FOR FAB. & ERECTION
3	3/26/2020	PARTIAL RELEASE FOR FABRICATION	1	3/26/2020	FOR FAB. & ERECTION
2	3/24/2020	PARTIAL RELEASE FOR FABRICATION	1	3/24/2020	FOR FAB. & ERECTION
1	2/7/2020	REVISED PER DESIGN CHANGE	1	2/8/2020	APPROVAL
		FIRST ISSUE	1	11/8/2019	APPROVAL

REVISIONS — PRINT RECORD

DWG TITLE
ROOF DUNNAGE
FRAMING, STAIR, & GUARDRAILS

PROJECT NAME

NOTE:
STEEL TO BE AS FOLLOWS
1. WIDE FLANGE TO BE ASTM A992
2. CHANNELS, PLATES AND ANGLES TO BE ASTM A36
3. HSS TO BE ASTM A500 GRADE B

ARCH'T –				DWG REF
ENG'R				DWG REF S–101.00 S–102.00
CONT'R			SUPER	
DRN BY TS/OC	CHK'D BY	JOB NO. 4550	SEARCH –	DWG NO. 2X
DATE 11/4/19	DATE			

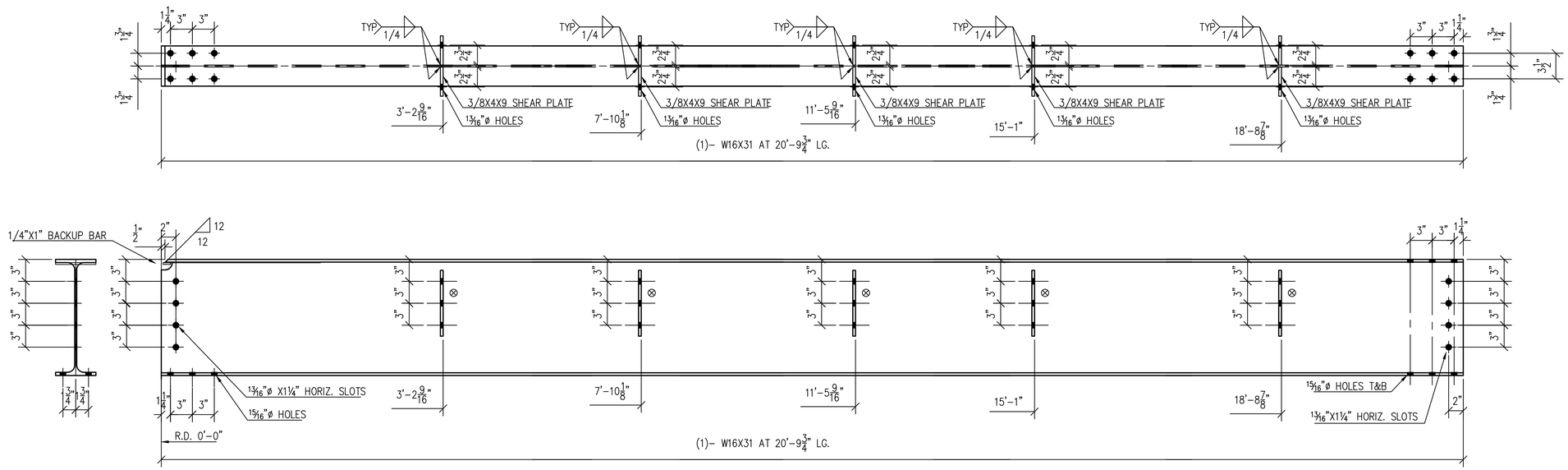

2YB59
(1 REQ.)

BILL OF MATERIALS					
REQ.	PC. MARK	SHAPE	LENGTH		REMARKS
1	2YB59	W16X31	20'	9 3/4"	–
10	pc19	PL3/8X4	0'	9"	–
1	2YB60	W16X31	20'	7 1/4"	–
10	pc19	PL3/8X4	0'	9"	–

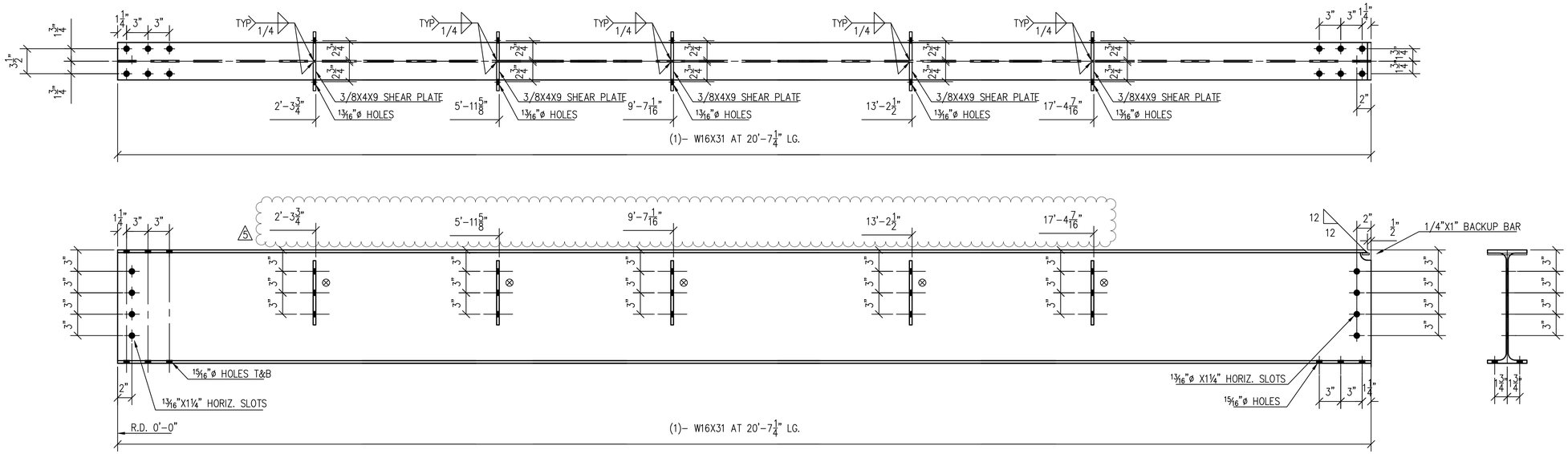

2YB60
(1 REQ.)

FOR FAB. & ERECTION:
4/30/2020

PLAN NORTH

THE FOLLOWING NOTES ARE AN INTEGRAL OF THIS DRAWING AND OUR CONTRACT:

1) THE G.C. IS TO RETURN ONE MARKED-UP COPY TO OUR OFFICE. We require review by both the architect and engineer.
2) If Architect/Engineer marks up drawing "REVISED" we will construe this action to mean we are in compliance with contract documents and, in fact, these drawings are "APPROVED" or "APPROVED AS NOTED" unless specifically stated otherwise.
3) These drawings are our interpretation of what is necessary to meet your specifications. It is most important, therefore, that they are checked by the G.C./Architect/Engineer against drawings provided by other trades to ensure proper installation to those surrounding materials.
4) This drawing is for the exclusive use of Hallen Steel.
5) Work areas must be free of all obstructions prior to steel installation date. This includes ducts, pipes, electrical work, and all other obstructions which prevent direct vertical lift of steel to its final location.
6) Should roof or slab penetrations be required, the G.C. is responsible for all roof or slab procution, penetrations and subsequent fire stopping, waterproofing, flashing, etc.
7) Location of holes, clips, cuts for other trades, if required by our contract, MUST be shown and or verified by others on this drawing when submitted for approval.
8) Do not scale this drawing.
9) Now steel is shown as [——] existing steel is shown as [—— —— ——]

STEEL	PAINT	HOLES	BOLTS	ELECTRODES
SEE NOTE	HOT-DIP GALVANIZED	13/16"ø	3/4"ø A325 (U.N.O.)	E7018 (U.N.O.)

NO.	DATE	COMMENTS	NO.	DATE	ISSUED FOR
5	4/30/2020	STAIR – RELEASE FOR FABRICATION	1	4/30/2020	FOR FAB. & ERECTION
4	4/1/2020	PARTIAL RELEASE FOR FABRICATION	1	4/1/2020	FOR FAB. & ERECTION
3	3/30/2020	PARTIAL RELEASE FOR FABRICATION	1	3/31/2020	FOR FAB. & ERECTION
2	3/26/2020	PARTIAL RELEASE FOR FABRICATION	1	3/26/2020	FOR FAB. & ERECTION
1	3/24/2020	PARTIAL RELEASE FOR FABRICATION	1	3/24/2020	FOR FAB. & ERECTION
1	2/7/2020	REVISED PER DESIGN CHANGE	1	2/8/2020	APPROVAL
		FIRST ISSUE	1	11/8/2019	APPROVAL

REVISIONS — PRINT RECORD

DWG TITLE
ROOF DUNNAGE
FRAMING, STAIR, & GUARDRAILS

PROJECT NAME

ARCH'T –
DWG REF
ENG'R
DWG REF S-101.00 S-102.00
CONT'R
SUPER

DRN BY	CHK'D BY	JOB NO.	SEARCH	DWG NO.
TS/OC		4550	–	2Y
DATE 11/4/19	DATE			

NOTE:
STEEL TO BE AS FOLLOWS
1. WIDE FLANGE TO BE ASTM A992
2. CHANNELS, PLATES AND ANGLES TO BE ASTM A36
3. HSS TO BE ASTM A500 GRADE B

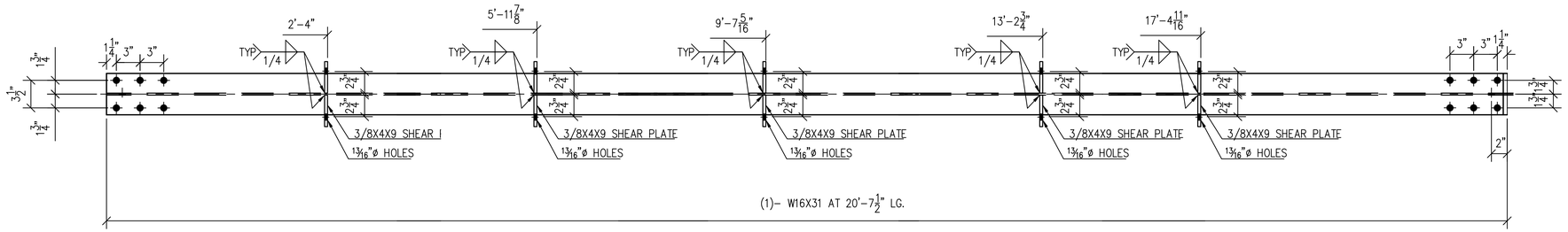

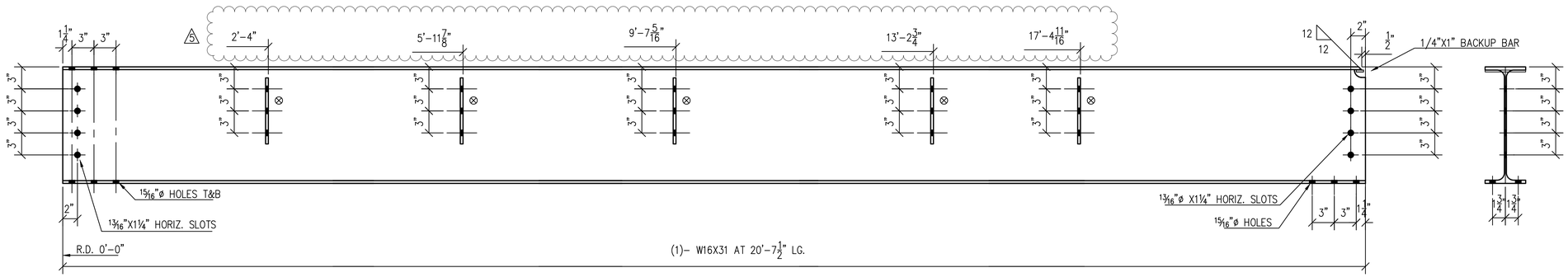

2ZB61
(1 REQ.)

BILL OF MATERIALS					
REQ.	PC. MARK	SHAPE	LENGTH		REMARKS
1	2ZB61	W16X31	20'	7 1/2"	–
10	pc19	PL3/8X4	0'	9"	–
1	2ZB62	W16X31	20'	7 1/2"	–
5	pc19	PL3/8X4	0'	9"	–

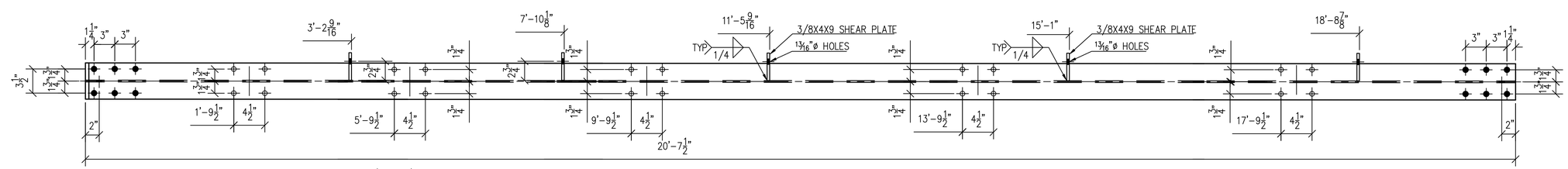

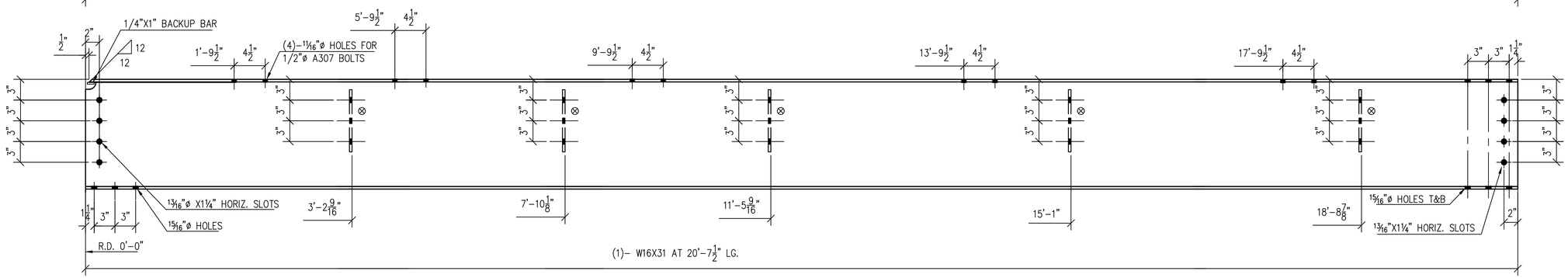

2ZB62
(1 REQ.)

FOR FAB. & ERECTION:
4/30/2020

PLAN NORTH

THE FOLLOWING NOTES ARE AN INTEGRAL OF THIS DRAWING AND OUR CONTRACT:

1) THE G.C. IS TO RETURN ONE MARKED-UP COPY TO OUR OFFICE. We require review by both the architect and engineer.
2) If Architect/Engineer marks up drawing "REVISED" we will consider this action to mean we are in compliance with contract documents and, in fact, these drawings are "APPROVED" or "APPROVED AS NOTED" unless specifically stated otherwise.
3) These drawings are our interpretation of what is necessary to meet your specifications. It is most important, therefore, that they are checked by the G.C./Architect/Engineer against drawings provided by other trades to ensure proper installation to those surrounding materials.
4) This drawing is for the exclusive use of Hallen Steel.
5) Work areas must be free of all obstructions prior to steel installation date. This includes ducts, pipes, electrical work, and all other obstructions which prevent direct verifiedlift of steel to its final location.
6) Should roof or slab penetrations be required, the G.C. is responsible for all roof or slab provision, penetrations and subsequent fire stopping, waterproofing, flashing, etc.
7) Location of holes, clips, cuts for other trades, if required by our contract, MUST be shown and or verified by others on this drawing when submitted for approval.
8) Do not scale this drawing.
9) New steel is shown as [————], existing steel is shown as [—— —— ——]

STEEL	PAINT	HOLES	BOLTS	ELECTRODES
SEE NOTE	HOT-DIP GALVANIZED	13/16"ø	3/4"ø A325 (U.N.O.)	E7018 (U.N.O.)

NO.	DATE	COMMENTS	NO.	DATE	ISSUED FOR
6	4/30/2020	STAIR – RELEASE FOR FABRICATION	1	4/30/2020	FOR FAB. & ERECTION
5	4/1/2020	PARTIAL RELEASE FOR FABRICATION	1	4/1/2020	FOR FAB. & ERECTION
4	3/30/2020	PARTIAL RELEASE FOR FABRICATION	1	3/31/2020	FOR FAB. & ERECTION
3	3/26/2020	PARTIAL RELEASE FOR FABRICATION	1	3/26/2020	FOR FAB. & ERECTION
2	3/24/2020	PARTIAL RELEASE FOR FABRICATION	1	3/24/2020	FOR FAB. & ERECTION
1	2/7/2020	REVISED PER DESIGN CHANGE	1	2/8/2020	APPROVAL
		FIRST ISSUE	1	11/8/2019	APPROVAL

REVISIONS — PRINT RECORD

DWG TITLE
ROOF DUNNAGE
FRAMING, STAIR, & GUARDRAILS

PROJECT NAME

ARCH'T –			DWG REF
ENG'R			DWG REF S-101.00 S-102.00
CONT'R		SUPER	
DRN BY TS/OC	CHK'D BY	JOB NO. 4550	SEARCH –	DWG NO. 2Z
DATE 11/4/19	DATE			

NOTE:
STEEL TO BE AS FOLLOWS
1. WIDE FLANGE TO BE ASTM A992
2. CHANNELS, PLATES AND ANGLES TO BE ASTM A36
3. HSS TO BE ASTM A500 GRADE B

BILL OF MATERIALS					
REQ.	PC. MARK	SHAPE	LENGTH		REMARKS
1	3AB63	W16X31	20'	6¾"	–
5	pc19	PL3/8X4	0'	9"	–

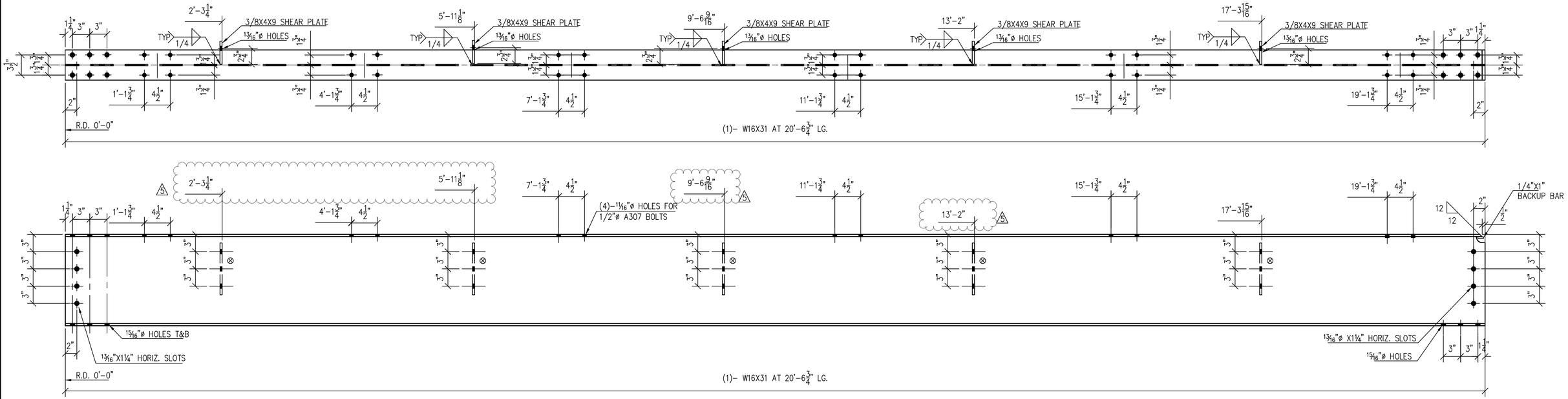

3AB63
(1 REQ.)

FOR FAB. & ERECTION:
4/30/2020

PLAN NORTH

THE FOLLOWING NOTES ARE AN INTEGRAL OF THIS DRAWING AND OUR CONTRACT:

1) THE G.C. IS TO RETURN ONE MARKED-UP COPY TO OUR OFFICE. We require review by both the architect and engineer.
2) If Architect/Engineer marks up drawing "REVISED" we will construe this action to mean we are in compliance with contract documents and, in fact, these drawings are "APPROVED" or "APPROVED AS NOTED" unless specifically stated otherwise.
3) These drawings are our interpretation of what is necessary to meet your specifications. It is most important, therefore, that they are checked by the G.C./Architect/Engineer against drawings provided by other trades to ensure proper installation to those surrounding materials.
4) This drawing is for the exclusive use of Hallen Steel.
5) Work areas must be free of all obstructions prior to steel installation date. This includes ducts, pipes, electrical work, and all other obstructions which prevent direct vertical lift of steel to its final location.
6) Should roof or slab penetrations be required, the G.C. is responsible for all roof or slab provision, penetrations and subsequent fire stopping, waterproofing, flashing, etc.
7) Location of holes, clips, cuts for other trades, if required by our contract, MUST be shown and or verified by others on this drawing when submitted for approval.
8) Do not scale this drawing.
9) New steel is shown as [———————], existing steel is shown as [—— —— ——]

STEEL	PAINT	HOLES	BOLTS	ELECTRODES
SEE NOTE	HOT-DIP GALVANIZED	13/16"ø	3/4"ø A325 (U.N.O.)	E7018 (U.N.O.)

NO.	DATE	COMMENTS	NO.	DATE	ISSUED FOR
5	4/30/2020	STAIR – RELEASE FOR FABRICATION	1	4/30/2020	FOR FAB. & ERECTION
4	4/1/2020	PARTIAL RELEASE FOR FABRICATION	1	4/1/2020	FOR FAB. & ERECTION
3	3/30/2020	PARTIAL RELEASE FOR FABRICATION	1	3/31/2020	FOR FAB. & ERECTION
2	3/26/2020	PARTIAL RELEASE FOR FABRICATION	1	3/26/2020	FOR FAB. & ERECTION
1	3/24/2020	PARTIAL RELEASE FOR FABRICATION	1	3/24/2020	FOR FAB. & ERECTION
0	2/7/2020	REVISED PER DESIGN CHANGE	1	2/8/2020	APPROVAL
		FIRST ISSUE	1	11/8/2019	APPROVAL

REVISIONS — PRINT RECORD

DWG TITLE
ROOF DUNNAGE
FRAMING, STAIR, & GUARDRAILS

PROJECT NAME

ARCH'T –
ENG'R
CONT'R
SUPER
DWG REF
DWG REF S-101.00 S-102.00

DRN BY	CHK'D BY	JOB NO.	SEARCH	DWG NO.
TS/OC		4550	–	3A
DATE 11/4/19	DATE			

NOTE:
STEEL TO BE AS FOLLOWS
1. WIDE FLANGE TO BE ASTM A992
2. CHANNELS, PLATES AND ANGLES TO BE ASTM A36
3. HSS TO BE ASTM A500 GRADE B

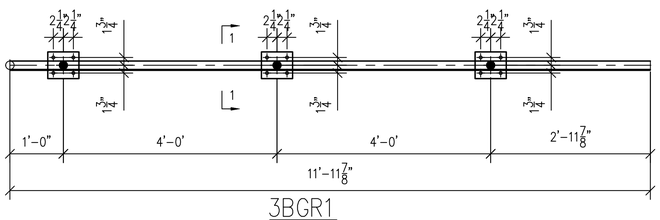

3BGR1
(1 REQ.)

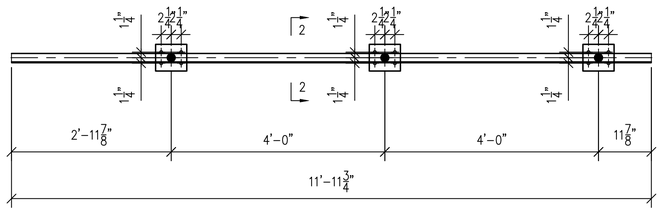

3BGR3
(6 REQ.)

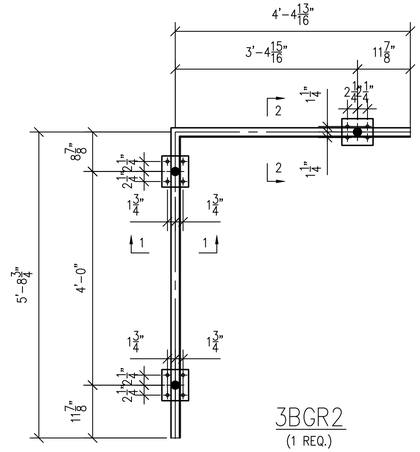

3BGR2
(1 REQ.)

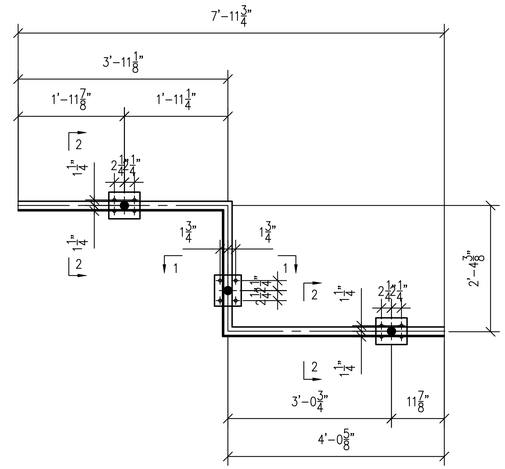

3BGR4
(1 REQ.)

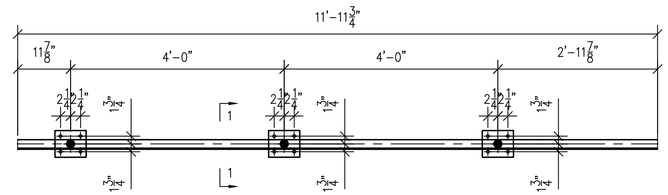

3BGR5
(3 REQ.)

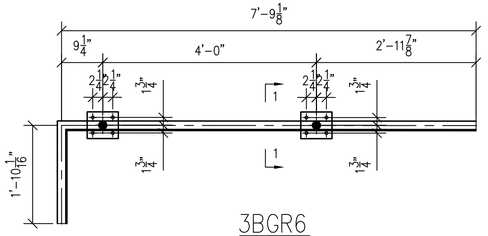

3BGR6
(1 REQ.)

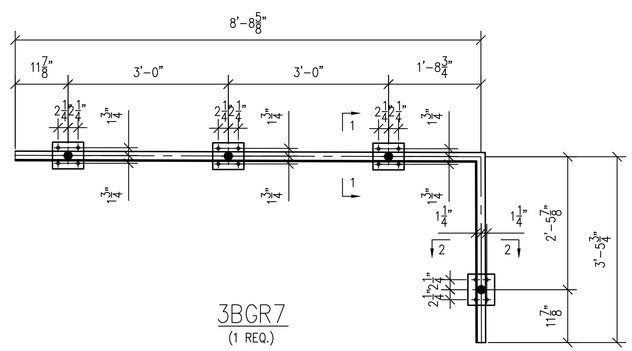

3BGR7
(1 REQ.)

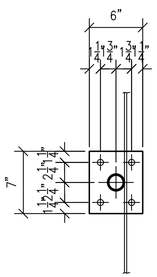

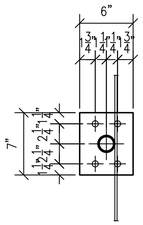

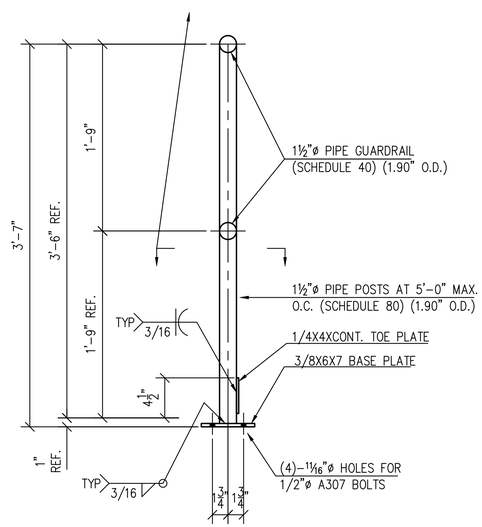

DETAIL 1
SCALE 1 1/2"=1'-0"

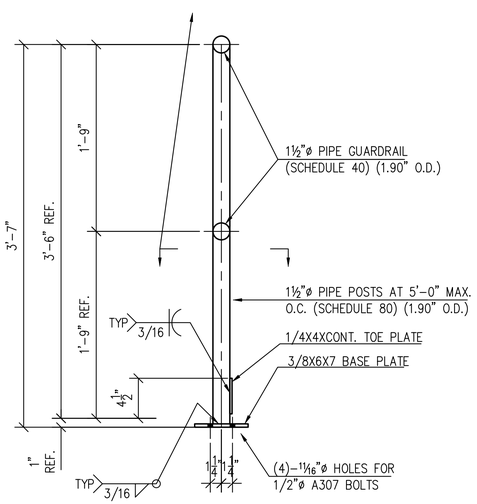

DETAIL 2
SCALE 1 1/2"=1'-0"

BILL OF MATERIALS

REQ.	PC. MARK	SHAPE	LENGTH		REMARKS
1	3BGR1	GUARDRAIL ASSEMBLY	–	–	–
LF	GUARDRAIL	1½"ø PIPE GUARDRAIL	25	LF	SCH. 40
3	POSTS	1½"ø PIPE GUARDRAIL	3'	7"±	SCH. 80
3	pa34	℞3/8X6	0'	7"	–
LF	KICK ℞	℞1/4X4	12	LF	–
1	3BGR2	GUARDRAIL ASSEMBLY	–	–	–
LF	GUARDRAIL	1½"ø PIPE GUARDRAIL	21	LF	SCH. 40
3	POSTS	1½"ø PIPE GUARDRAIL	3'	7"±	SCH. 80
2	pa34	℞3/8X6	0'	7"	–
1	pb34	℞3/8X6	0'	7"	–
LF	KICK ℞	℞1/4X4	11	LF	–
6	3BGR3	GUARDRAIL ASSEMBLY	–	–	–
LF	GUARDRAIL	1½"ø PIPE GUARDRAIL	168	LF	SCH. 40
18	POSTS	1½"ø PIPE GUARDRAIL	3'	7"±	SCH. 80
18	pb34	℞3/8X6	0'	7"	–
LF	KICK ℞	℞1/4X4	84	LF	–
1	3BGR4	GUARDRAIL ASSEMBLY	–	–	–
LF	GUARDRAIL	1½"ø PIPE GUARDRAIL	22	LF	SCH. 40
3	POSTS	1½"ø PIPE GUARDRAIL	3'	7"±	SCH. 80
1	pa34	℞3/8X6	0'	7"	–
2	pb34	℞3/8X6	0'	7"	–
LF	KICK ℞	℞1/4X4	11	LF	–
3	3BGR5	GUARDRAIL ASSEMBLY	–	–	–
LF	GUARDRAIL	1½"ø PIPE GUARDRAIL	72	LF	SCH. 40
9	POSTS	1½"ø PIPE GUARDRAIL	3'	7"±	SCH. 80
9	pa34	℞3/8X6	0'	7"	–
LF	KICK ℞	℞1/4X4	36	LF	–
1	3BGR6	GUARDRAIL ASSEMBLY	–	–	–
LF	GUARDRAIL	1½"ø PIPE GUARDRAIL	20	LF	SCH. 40
3	POSTS	1½"ø PIPE GUARDRAIL	3'	7"±	SCH. 80
3	pa34	℞3/8X6	0'	7"	–
LF	KICK ℞	℞1/4X4	10	LF	–
1	3BGR7	GUARDRAIL ASSEMBLY	–	–	–
LF	GUARDRAIL	1½"ø PIPE GUARDRAIL	24	LF	SCH. 40
4	POSTS	1½"ø PIPE GUARDRAIL	3'	7"±	SCH. 80
3	pa34	℞3/8X6	0'	7"	–
1	pb34	℞3/8X6	0'	7"	–
LF	KICK ℞	℞1/4X4	12	LF	–

FOR FAB. & ERECTION:
4/30/2020

PLAN NORTH

THE FOLLOWING NOTES ARE AN INTEGRAL OF THIS DRAWING AND OUR CONTRACT:

1) THE G.C. IS TO RETURN ONE MARKED-UP COPY TO OUR OFFICE. We require review by both the architect and engineer.
2) If Architect/Engineer marks up drawing "REVISED" we will construe this action to mean we are in compliance with contract documents and, in fact, these drawings are "APPROVED" or "APPROVED AS NOTED" unless specifically stated otherwise.
3) These drawings are our interpretation of what is necessary to meet your specifications. It is most important, therefore, that they are checked by the G.C./Architect/Engineer against drawings provided by other trades to assure proper installation to those surrounding materials.
4) This drawing is for the exclusive use of Hallen Steel.
5) Work areas must be free of all obstructions prior to steel installation date. This includes ducts, pipes, electrical work, and all other obstructions which prevent direct vertical lift of steel to its final location.
6) Should roof or slab penetrations be required, the G.C. is responsible for all roof or slab provision, penetrations and subsequent fire stopping, waterproofing, flashing, etc.
7) Location of holes, clips, cuts for other trades, if required by our contract, MUST be shown and or verified by others on this drawing when submitted for approval.
8) Do not scale this drawing.
9) New steel is shown as [———], existing steel is shown as [— — — —]

STEEL	PAINT	HOLES	BOLTS	ELECTRODES
SEE NOTE	HOT-DIP GALVANIZED	13/16"ø	3/4"ø A325 (U.N.O.)	E7018 (U.N.O.)

NO.	DATE	COMMENTS	NO.	DATE	ISSUED FOR
4	4/30/2020	STAIR – RELEASE FOR FABRICATION	1	4/30/2020	FOR FAB. & ERECTION
3	4/1/2020	PARTIAL RELEASE FOR FABRICATION	1	4/1/2020	FOR FAB. & ERECTION
2	3/30/2020	PARTIAL RELEASE FOR FABRICATION	1	3/31/2020	FOR FAB. & ERECTION
1	3/26/2020	PARTIAL RELEASE FOR FABRICATION	1	3/26/2020	FOR FAB. & ERECTION
2	3/24/2020	PARTIAL RELEASE FOR FABRICATION	1	3/24/2020	FOR FAB. & ERECTION
1	2/7/2020	REVISED PER DESIGN CHANGE	1	2/8/2020	APPROVAL
		FIRST ISSUE	1	11/8/2019	APPROVAL

REVISIONS — PRINT RECORD

DWG TITLE
ROOF DUNNAGE
FRAMING, STAIR, & GUARDRAILS

PROJECT NAME

ARCH'T –
ENG'R
CONT'R
SUPER
DWG REF
DWG REF S-101.00 S-102.00

DRN BY	CHK'D BY	JOB NO.	SEARCH	DWG NO.
TS/OC		4550	–	3B
DATE 11/4/19	DATE			

NOTE:
STEEL TO BE AS FOLLOWS
1. WIDE FLANGE TO BE ASTM A992
2. CHANNELS, PLATES AND ANGLES TO BE ASTM A36
3. HSS TO BE ASTM A500 GRADE B

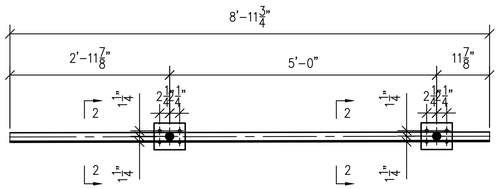

3CGR8
(1 REQ.)

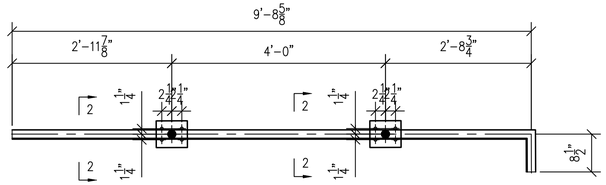

3CGR9
(1 REQ.)

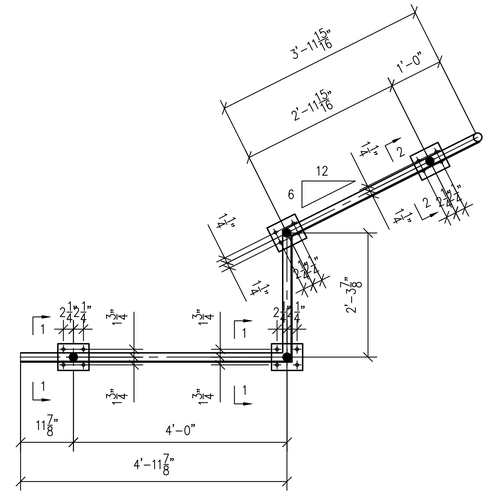

3CGR10
(1 REQ.)

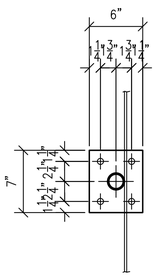

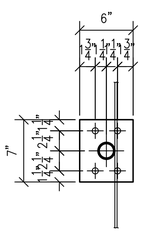

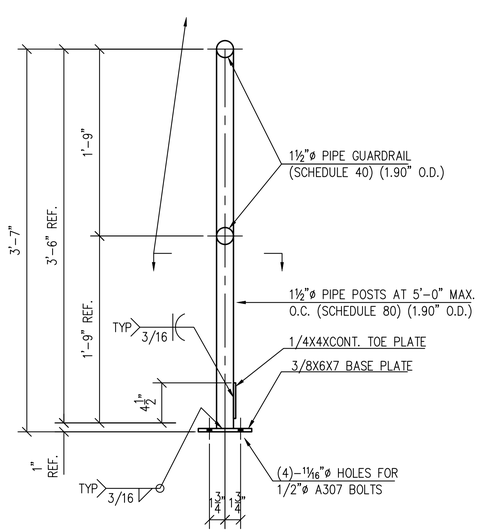

DETAIL 1
SCALE 1 1/2"=1'-0"

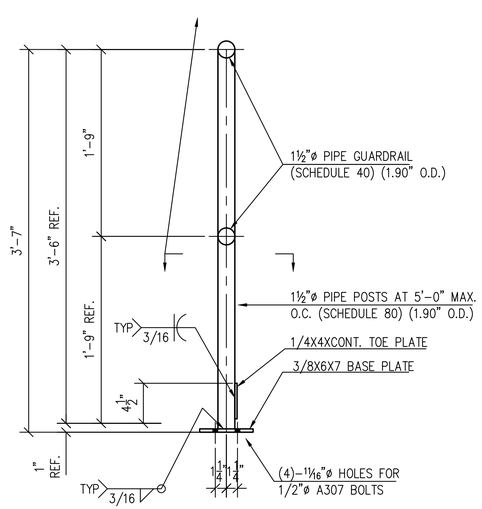

DETAIL 2
SCALE 1 1/2"=1'-0"

BILL OF MATERIALS

REQ.	PC. MARK	SHAPE	LENGTH		REMARKS
1	3CGR8	GUARDRAIL ASSEMBLY	–	–	–
LF	GUARDRAIL	1½"ø PIPE GUARDRAIL	18	LF	SCH. 40
2	POSTS	1½"ø PIPE GUARDRAIL	3'	7"±	SCH. 80
2	pb34	℞3/8X6	0'	7"	–
LF	KICK ℞	℞1/4X4	9	LF	–
1	3CGR9	GUARDRAIL ASSEMBLY	–	–	–
LF	GUARDRAIL	1½"ø PIPE GUARDRAIL	21	LF	SCH. 40
2	POSTS	1½"ø PIPE GUARDRAIL	3'	7"±	SCH. 80
2	pb34	℞3/8X6	0'	7"	–
LF	KICK ℞	℞1/4X4	11	LF	–
1	3CGR10	GUARDRAIL ASSEMBLY	–	–	–
LF	GUARDRAIL	1½"ø PIPE GUARDRAIL	24	LF	SCH. 40
4	POSTS	1½"ø PIPE GUARDRAIL	3'	7"±	SCH. 80
2	pa34	℞3/8X6	0'	7"	–
2	pb34	℞3/8X6	0'	7"	–
LF	KICK ℞	℞1/4X4	12	LF	–

FOR FAB. & ERECTION:
4/30/2020

PLAN NORTH

THE FOLLOWING NOTES ARE AN INTEGRAL OF THIS DRAWING AND OUR CONTRACT:

1) THE G.C. IS TO RETURN ONE MARKED-UP COPY TO OUR OFFICE. We require review by both the architect and engineer.
2) If Architect/Engineer marks up drawing "REVIEWED" we will construe this action to mean we are in compliance with contract documents and, in fact, these drawings are "APPROVED" or "APPROVED AS NOTED" unless specifically stated otherwise.
3) These drawings are our interpretation of what is necessary to meet your specifications. It is most important, therefore, that they are checked by the G.C./Architect/Engineer against drawings provided by other trades to ensure proper installation to those surrounding materials.
4) This drawing is for the exclusive use of Hallen Steel.
5) Work areas must be free of all obstructions prior to steel installation date. This includes ducts, pipes, electrical work, and all other obstructions which prevent direct vertical lift of steel to its final location.
6) Should roof or slab penetrations be required, the G.C. is responsible for all roof or slab procution, penetrations and subsequent fire stopping, waterproofing, flashing, etc.
7) Location of holes, clips, cuts for other trades, if required by our contract, MUST be shown and or verified by others on this drawing when submitted for approval.
8) Do not scale this drawing.
9) New steel is shown as [———], existing steel is shown as [— — —]

STEEL	PAINT	HOLES	BOLTS	ELECTRODES
SEE NOTE	HOT-DIP GALVANIZED	13/16"ø	3/4"ø A325 (U.N.O.)	E7018 (U.N.O.)

NO.	DATE	COMMENTS	NO.	DATE	ISSUED FOR
5	4/30/2020	STAIR – RELEASE FOR FABRICATION	1	4/30/2020	FOR FAB. & ERECTION
4	4/1/2020	PARTIAL RELEASE FOR FABRICATION	1	4/1/2020	FOR FAB. & ERECTION
3	3/30/2020	PARTIAL RELEASE FOR FABRICATION	1	3/31/2020	FOR FAB. & ERECTION
2	3/26/2020	PARTIAL RELEASE FOR FABRICATION	1	3/26/2020	FOR FAB. & ERECTION
2	3/24/2020	PARTIAL RELEASE FOR FABRICATION	1	3/24/2020	FOR FAB. & ERECTION
1	2/7/2020	REVISED PER DESIGN CHANGE	1	2/8/2020	APPROVAL
		FIRST ISSUE	1	11/8/2019	APPROVAL

REVISIONS — PRINT RECORD

DWG TITLE
ROOF DUNNAGE
FRAMING, STAIR, & GUARDRAILS

PROJECT NAME

NOTE:
STEEL TO BE AS FOLLOWS
1. WIDE FLANGE TO BE ASTM A992
2. CHANNELS, PLATES AND ANGLES TO BE ASTM A36
3. HSS TO BE ASTM A500 GRADE B

ARCH'T –				DWG REF
ENG'R				DWG REF S-101.00 S-102.00
CONT'R			SUPER	
DRN. BY TS/OC	CHK'D BY	JOB NO. 4550	SEARCH –	DWG NO. 3C
DATE 11/4/19	DATE			

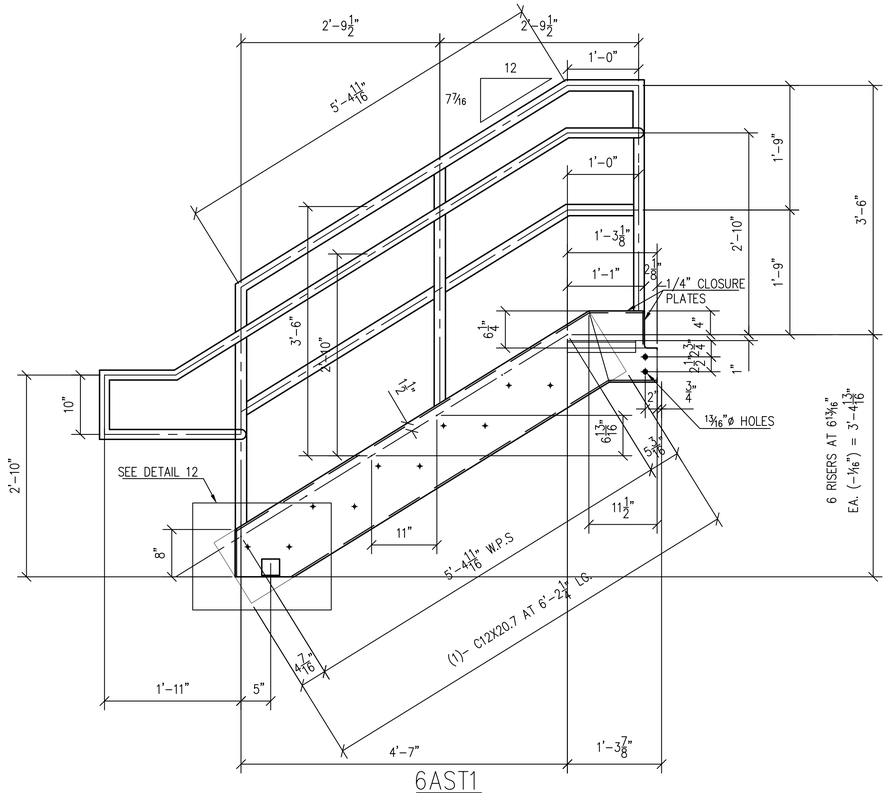

6AST1
(1 REQ.)

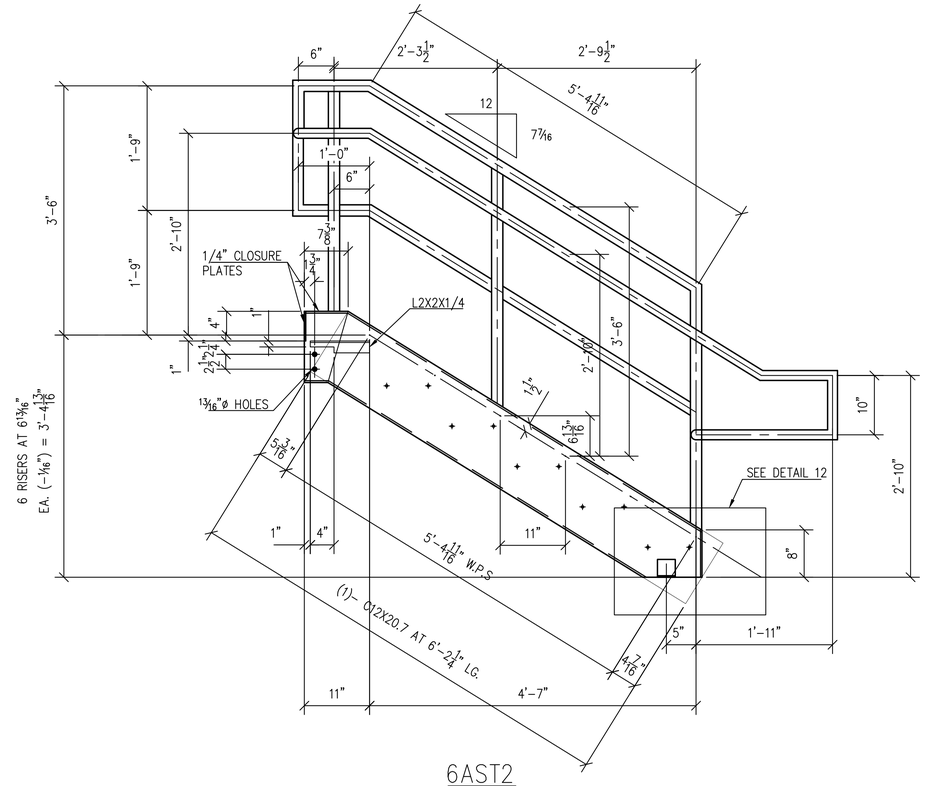

6AST2
(1 REQ.)

BILL OF MATERIALS

REQ.	PC. MARK	SHAPE	LENGTH		REMARKS
1	6AST1	C12X20.7	6'	2¼"	–
1	ma1	C12X20.7	0'	11½"	–
1	aa1	L3X3X1/4	0'	3"	–
1	ab1	L2X2X1/4	0'	11½"	–
1	pa1	PL1/4X3	0'	8"	–
1	pb1	PL1/4X3	0'	5"	–
LF	GUARDRAIL	1½" PIPE (SCH. 40)	13	LF	–
LF	HANDRAIL	1¼" PIPE (SCH. 40)	10	LF	–
3	POSTS	1½" PIPE (SCH. 80)	3'	5"±	–
1	6AST2	C12X20.7	6'	2¼"	–
1	mb1	C12X20.7	0'	7⅞"	–
1	aa1	L3X3X1/4	0'	3"	–
1	ac1	L2X2X1/4	0'	10"	–
1	pa1	PL1/4X3	0'	8"	–
1	pb1	PL1/4X3	0'	5"	–
LF	GUARDRAIL	1½" PIPE (SCH. 40)	13	LF	–
LF	HANDRAIL	1¼" PIPE (SCH. 40)	10	LF	–
3	POSTS	1½" PIPE (SCH. 80)	3'	5"±	–
1	6AGT1	1"X3/16" 19-W-4 GTG	3'	5½"	1'-3" WIDE
		ABRASIVE NOSING	3'	5½"	
5	6AGT2	1"X3/16" GTG. TREADS	3'	6"	1'-0⅛" WIDE

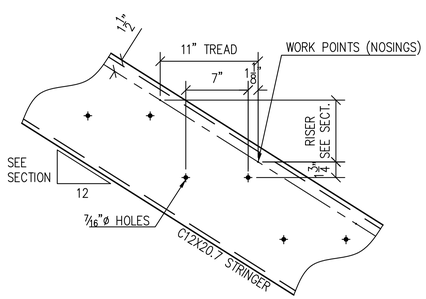

TYPICAL HOLE LOCATION DETAIL
SCALE 1 1/2"=1'-0"

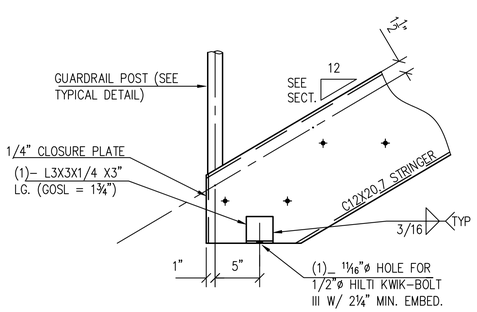

DETAIL 12
SCALE 1 1/2"=1'-0"

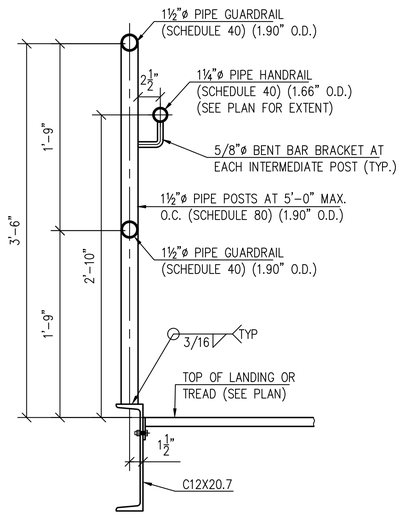

TYPICAL GUARDRAIL DETAIL
SCALE 1 1/2"=1'-0"

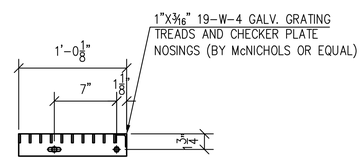

6AGT2
3'-6" LONG (OUT TO OUT)
(5 REQ.)

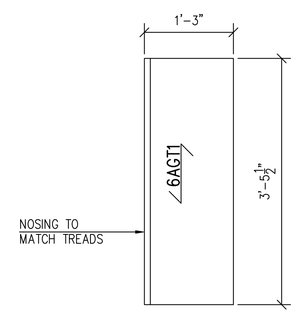

6AGT1
(1 REQ.)

FOR FAB. & ERECTION:
4/30/2020

PLAN NORTH

THE FOLLOWING NOTES ARE AN INTEGRAL OF THIS DRAWING AND OUR CONTRACT:

1) THE G.C. IS TO RETURN ONE MARKED-UP COPY TO OUR OFFICE. We require review by both the architect and engineer.
2) If Architect/Engineer marks up drawing "REVISED" we will construe this action to mean we are in compliance with contract documents and, in fact, these drawings are "APPROVED" or "APPROVED AS NOTED" unless specifically stated otherwise.
3) These drawings are our interpretation of what is necessary to meet your specifications. It is most important, therefore, that they are checked by the G.C./Architect/Engineer against drawings provided by other trades to ensure proper installation to those surrounding materials.
4) This drawing is for the exclusive use of Hidden Steel.
5) Work areas must be free of all obstructions prior to steel installation date. This includes ducts, pipes, electrical work, and all other obstructions which prevent direct vertical lift of steel to its final location.
6) Should roof or slab penetrations be required, the G.C. is responsible for all roof or slab procution, penetrations and subsequent fire stopping, waterproofing, flashing, etc.
7) Location of holes, clips, cuts for other trades, if required by our contract, MUST be shown and or verified by others on this drawing when submitted for approval.
8) Do not scale this drawing.
9) Near steel is shown as [———————], existing steel is shown as [—— —— ——]

STEEL	PAINT	HOLES	BOLTS	ELECTRODES
SEE NOTE	HOT-DIP GALVANIZED	13/16"ø	3/4"ø A325 (U.N.O.)	E7018 (U.N.O.)

NO.	DATE	COMMENTS	NO.	DATE	ISSUED FOR
6	4/30/2020	STAIR – RELEASE FOR FABRICATION	1	4/30/2020	FOR FAB. & ERECTION
5	4/1/2020	PARTIAL RELEASE FOR FABRICATION	1	4/1/2020	FOR FAB. & ERECTION
4	3/30/2020	PARTIAL RELEASE FOR FABRICATION	1	3/31/2020	FOR FAB. & ERECTION
3	3/26/2020	PARTIAL RELEASE FOR FABRICATION	1	3/26/2020	FOR FAB. & ERECTION
2	3/24/2020	PARTIAL RELEASE FOR FABRICATION	1	3/24/2020	FOR FAB. & ERECTION
1	2/7/2020	REVISED PER DESIGN CHANGE	1	2/8/2020	APPROVAL
		FIRST ISSUE	1	11/8/2019	APPROVAL

REVISIONS — PRINT RECORD

DWG TITLE
ROOF DUNNAGE
FRAMING, STAIR, & GUARDRAILS

PROJECT NAME

NOTE:
STEEL TO BE AS FOLLOWS
1. WIDE FLANGE TO BE ASTM A992
2. CHANNELS, PLATES AND ANGLES TO BE ASTM A36
3. HSS TO BE ASTM A500 GRADE B

ARCH'T	DWG REF
–	
ENG'R	DWG REF S-101.00 S-102.00
CONT'R	SUPER

DRN BY	CHK'D BY	JOB NO.	SEARCH	DWG NO.
TS/OC		4550	–	6A
DATE 11/4/19	DATE			